Spanish Fork South Irrigation Company

Typical Drawings

Sheet Index

1 Cover Sheet
2 Trashrack and Inlet Structure
3 Open Ditch to Pipe Transition and Structure
4 Weir Turnout Gate
5 3-Foot Cipolletti Weir
6 1-Foot Parshall Flume
7 90° V-Notch Weir
8 Irrigation Turnout-Diversion Box
9 Directional Drilling Pipe Bedding Details
10 Box Culvert Details
11 Open Cut Details
12 Concrete Liner
13 Large Diameter Pipe Details
14 Turnout Details
15 Fence Details

Disclaimer:

The Drawings Provided in These Standards are Only Intended to Show the Type of Facility(ies) That Will be Acceptable to the SFSIC. These Are Not Intended to be Used Directly in the Design of Facilities as Each Encroachment/Crossing Has its Own Unique Circumstance, Dimensions, Design Criteria, etc. It is the Responsibility of the Applicant's Design Engineer, Who Will Stamp the Drawing, to Ensure that Each Crossing is Designed Properly.

Spanish Fork South Irrigation Company

DESIGNER: Kyle DeVaney
DRAFTSMAN: Matt Gunn
CHECKED: Kyle DeVaney
REVIEWED: Matt Gunn
PROJECT LEADER: Kyle DeVaney
PRINT DATE: November 2, 2023

NO.	DATE	INITS.	DESCRIPTION

Spanish Fork South Irrigation Company
Typical Drawings
Cover Sheet, Sheet Index

JOB NO. 21073

01- Cover Sheet.dwg
O:\21073 SFSIC Reviews\Standard Drawings
LAYOUT: Cover

SHEET 1 OF 15

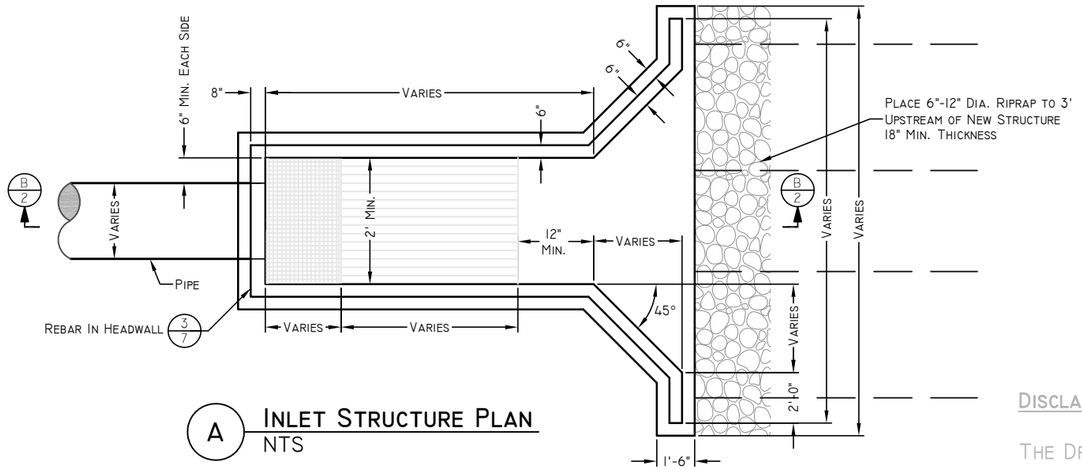

A **INLET STRUCTURE PLAN**
NTS

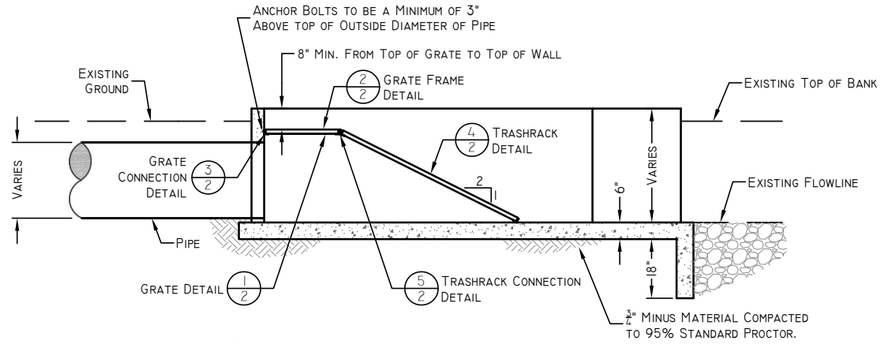

B **INLET STRUCTURE PROFILE**
NTS

DISCLAIMER:

THE DRAWINGS PROVIDED IN THESE STANDARDS ARE ONLY INTENDED TO SHOW THE TYPE OF FACILITY(IES) THAT WILL BE ACCEPTABLE TO THE SFSIC. THESE ARE NOT INTENDED TO BE USED DIRECTLY IN THE DESIGN OF FACILITIES AS EACH ENCROACHMENT/CROSSING HAS ITS OWN UNIQUE CIRCUMSTANCE, DIMENSIONS, DESIGN CRITERIA, ETC. IT IS THE RESPONSIBILITY OF THE APPLICANT'S DESIGN ENGINEER, WHO WILL STAMP THE DRAWING, TO ENSURE THAT EACH CROSSING IS DESIGNED PROPERLY.

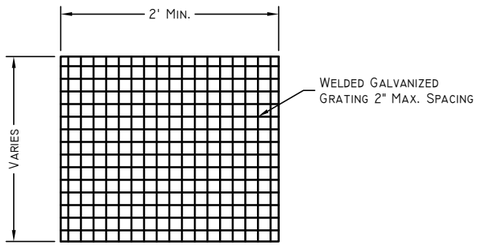

1 **GRATE DETAIL**
NTS

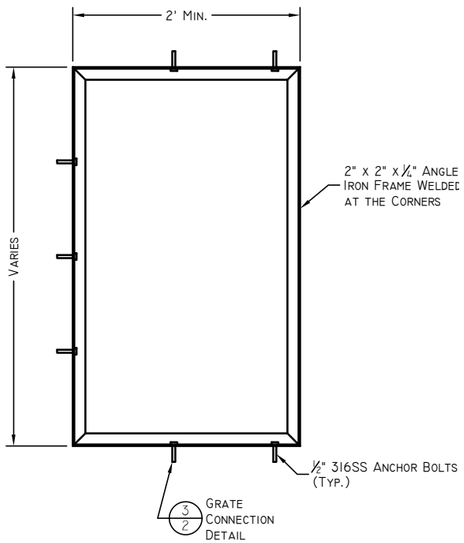

2 **GRATE FRAME DETAIL**
NTS

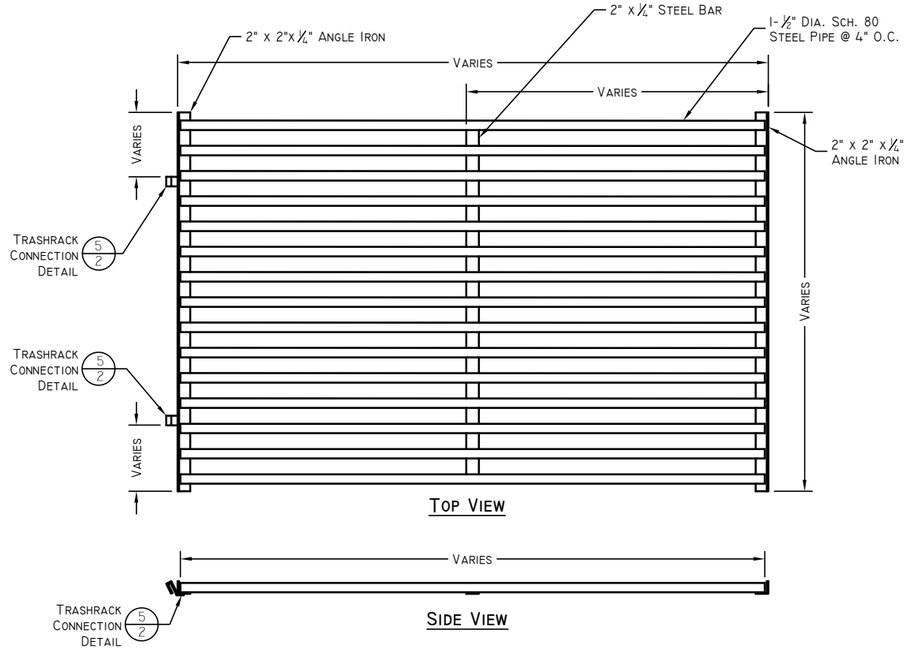

4 **TRASHRACK DETAIL**
NTS

NOTES:

1. IF BOX IS CAST IN PLACE, REBAR TO BE PLACED AT 12 INCHES ON CENTER (O.C.) EACH WAY (E.W.) MINIMUM.
2. ALL PIPES INTO BOX SHALL BE GROUTED AND WATERTIGHT.
3. SUBMIT TO CANAL COMPANY ENGINEER FOR APPROVAL.
4. ENTIRE TRASHRACK TO BE HOT DIPPED GALVANIZED.
5. MINIMUM TWO GRATES TO BE INSTALLED. SUBMIT TO CANAL COMPANY ENGINEER FOR APPROVAL.

TABLE 1 FOR DETAIL 5/2

TRASHRACK CONNECTIONS REQUIRED	
PIPE SIZE	NUMBER OF CONNECTIONS REQUIRED
24"	4
30"	5

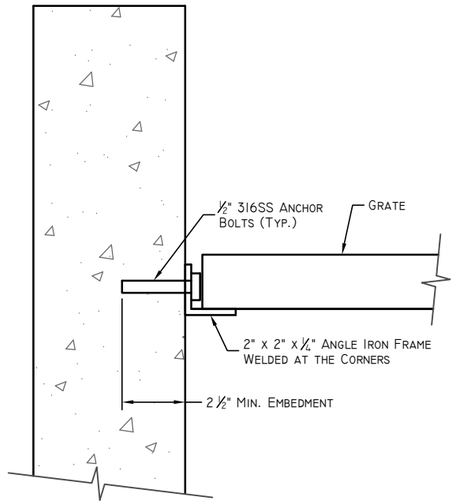

3 **GRATE CONNECTION DETAIL**
NTS

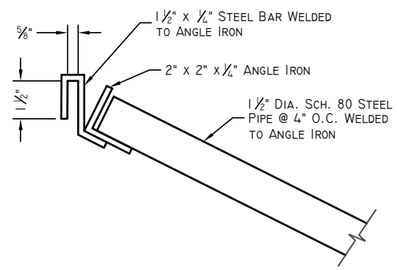

5 **TRASHRACK CONNECTION DETAIL**
NTS

SPANISH FORK SOUTH IRRIGATION COMPANY

PROJECT LEADER: KYLE DEVANEY
PRINT DATE: NOVEMBER 2, 2023

NO.	DATE	DESCRIPTION	DESIGNED: KYLE DEVANEY	CHECKED: REVIEWED
		REVISIONS	DRAFTSMAN: MATT GUMM	REVIEWED:

SPANISH FORK SOUTH IRRIGATION COMPANY

TYPICAL DRAWINGS
TRASHRACK AND INLET STRUCTURE

JOB NO. 21073

02-Trashrack and Inlet Structure.dwg
O:\21073 SFSIC Reviews\Standard Drawings

LAYOUT: Details

SHEET 2 OF 15

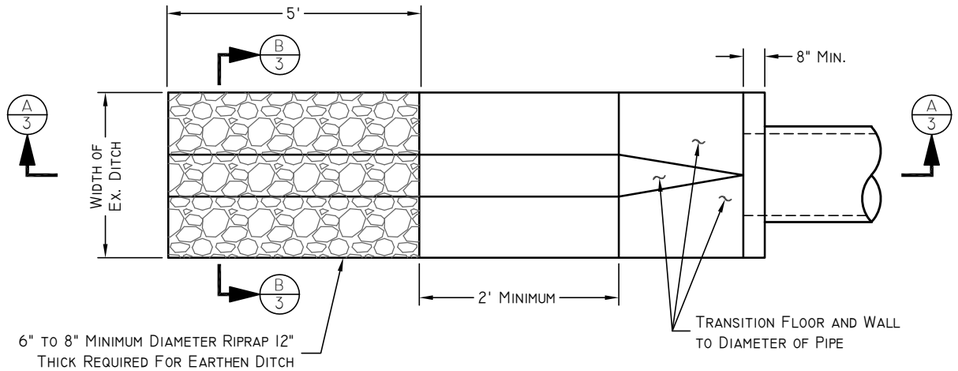

1 Ditch Pipe Connection
NTS

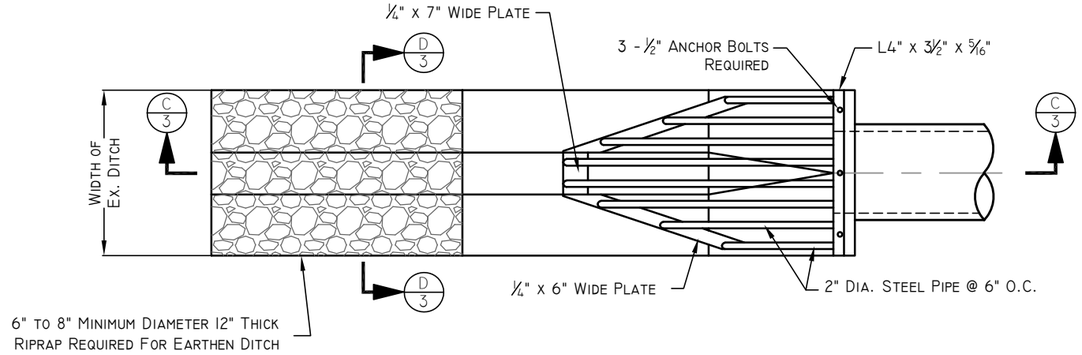

2 Trash Rack Plan
NTS

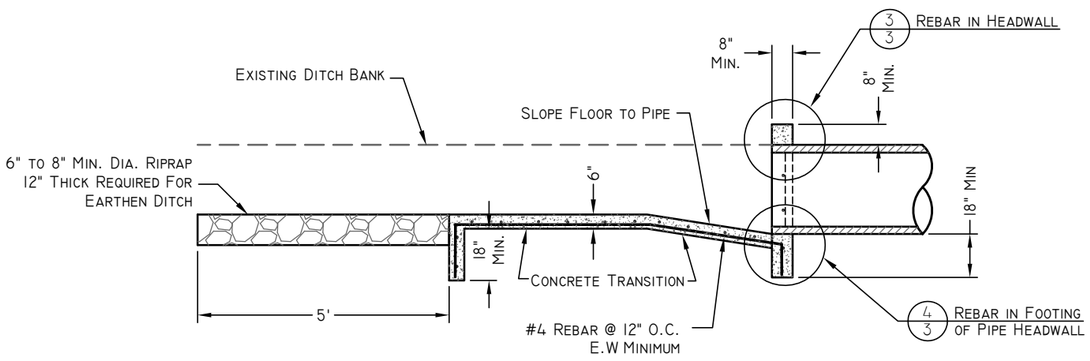

A Ditch Pipe Connection Section
NTS

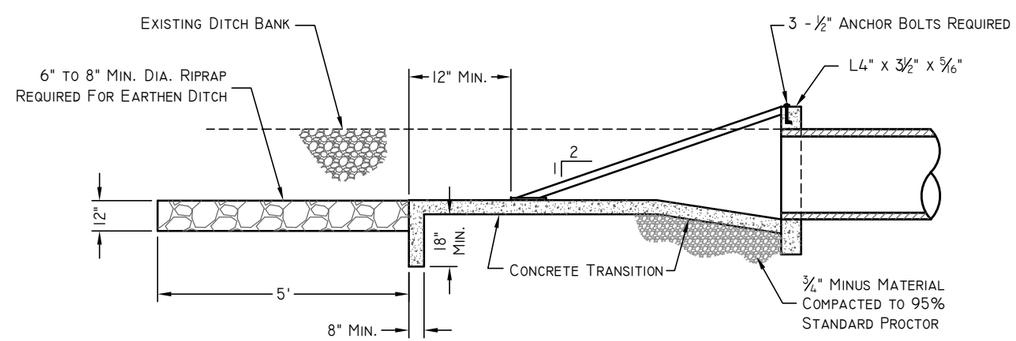

C Trash Rack Section
NTS

Disclaimer:

The Drawings provided in these Standards are only intended to show the type of Facility(ies) that will be acceptable to the SFSIC. These are not intended to be used directly in the design of Facilities as each encroachment/crossing has its own unique circumstance, dimensions, design criteria, etc. It is the responsibility of the Applicant's Design Engineer, who will stamp the drawing, to ensure that each crossing is designed properly.

Notes:

1. If box is cast in place, rebar to be placed at 12 inches O.C. E.W. minimum.
2. All pipes into box shall be grouted and watertight.
3. Submit to Canal Company Engineer for approval of final dimensions on rebar reinforcement and concrete components.

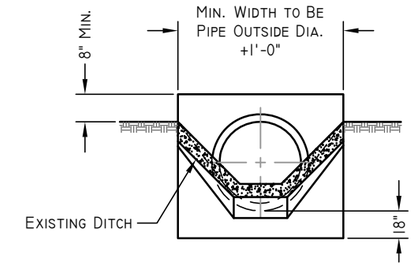

B Ditch Pipe Connection Section
NTS

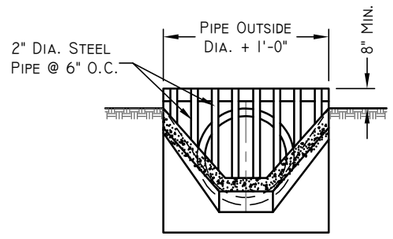

D Trash Rack Front Section
NTS

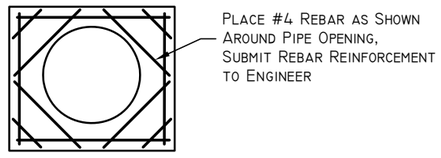

3 Rebar in Headwall
NTS

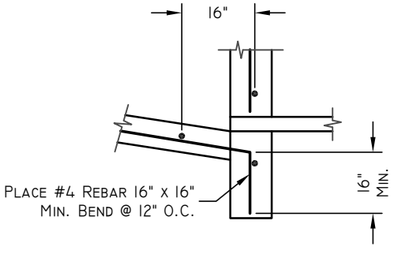

4 Rebar in Footing of Pipe Headwall
NTS

Spanish Fork South Irrigation Company

Typical Drawings
Open Ditch to Pipe Transition & Structure

Designer: Kyle DeVaney	Project Leader: Kyle DeVaney
Draftsman: Matt Gunn	Print Date: November 2, 2023
Checked:	Checked
Checked:	Reviewed

No.	Date	Description
		Revisions

Job No. 21073

03-Open Ditch to Pipe Transition.dwg
O:\21073 SFSIC Reviews\Standard Drawings

LAYOUT: Details

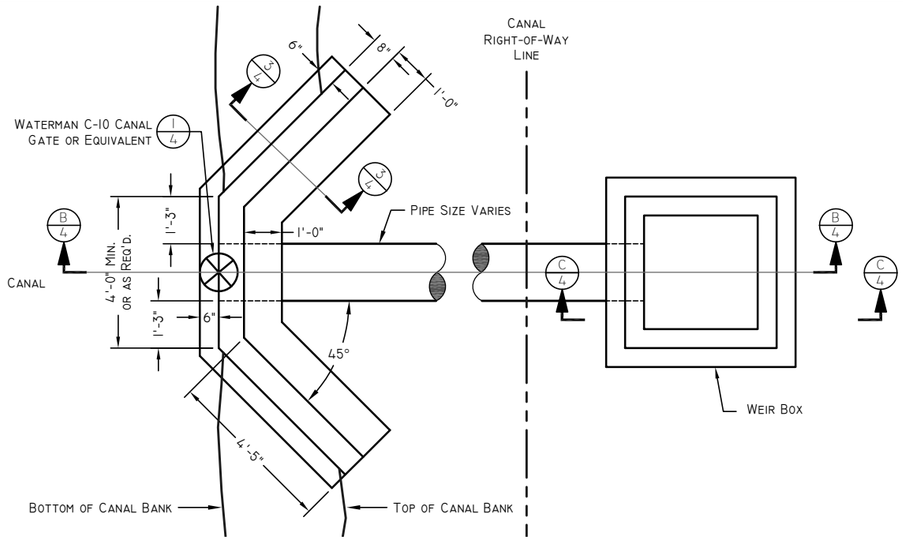

A WEIR PLAN
NTS

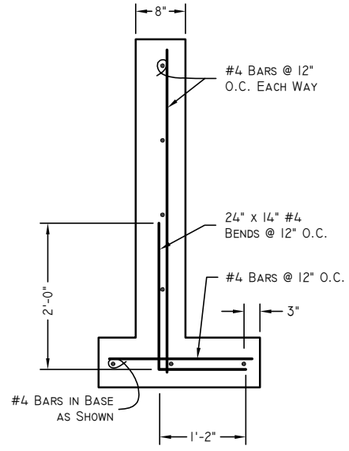

3 REBAR DETAIL
NTS

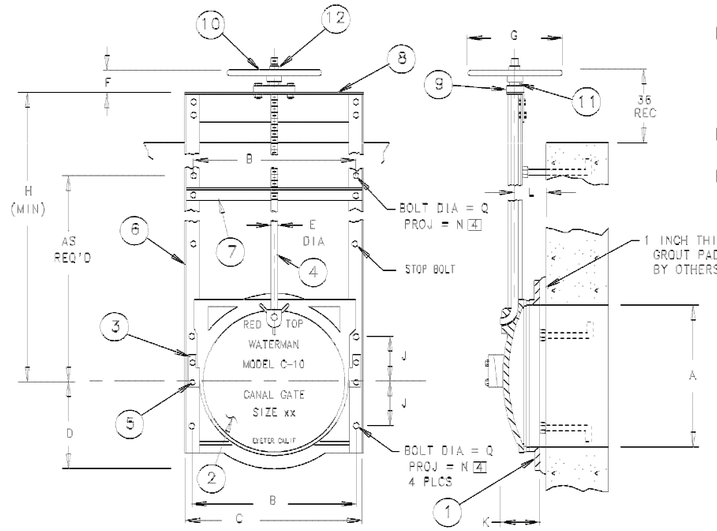

NOTES
1. TYPE 2 lubricated ball bearing lift used on 48" and larger gates.
2. Applies to spigotback gate only. Optional spigot, shown in separate detail.
3. All dimensions are also applicable for model CL-10 & CM-10 gates.
4. Add grout pad thickness to anchor bolt projection.
5. Type 3E 2:1 lift used, mounted to dual headrail.

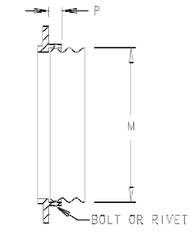

Corrugated Pipe Attached to Spigot Back Frame

PARTS LIST		
No.	Name	Qty.
1	Frame	1
2	Cover	1
3	Wedge (Right & Left)	1 ea.
4	Stem	1
5	Wedge Bolts	4
6	Guide Rail	2
7	Stem Support	A/R
8	Head Rail	1
9	Lift Collar	1
10	Handwheel	1
11	Lift Nut	1
12	Limit Nut	1

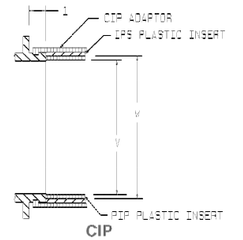

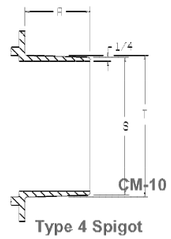

Type 4 Spigot

A	B	C	D	E	F	G	H	J	K	L	M [2]	N	P [2]	Q	R	S	T	V	W
6	8	9⅛	4	⅞	2⅛	10	24	3	3½	2⅝	7	3½	2¼	½	-	-	-	6.160	6.645
8	10	12	4⅞	⅞	2⅛	10	24	3	3¾	2½	9	3½	2¼	½	4	7 13/16	8	8.180	8.645
10	12	13⅞	6	⅞	2⅛	10	24	3½	3¾	2½	11	3½	2¼	½	3⅞	9⅞	10	10.220	10.770
12	14	15⅞	7	⅞	2⅛	10	24	4	3½	3	13	4	2¼	½	4	11⅞	12	12.270	12.780
14	16	17⅞	8	⅞	2⅛	10	27	4¾	3¾	3¼	15	4	2¼	½	-	-	-	-	-
15	17	18⅞	8⅞	⅞	2⅛	10	30	5	4½	3½	16	4	2⅛	½	4	14⅞	15	-	-
16	18¾	20⅝	9⅞	⅞	2⅛	10	32	5½	4½	3½	17	4½	2¼	⅝	-	-	-	-	-
18	21	22⅞	10½	1	3⅛	12	34	6	4½	4¼	19	4½	2¼	⅝	4	17 13/16	18	-	-
20	23¼	25⅛	11¾	1	3⅛	12	38	7	4¾	4	21	4½	2¼	⅝	-	-	-	-	-
21	24	25⅞	12 5/16	1	3⅛	12	40	7	4¾	4	22	4½	2¼	⅝	-	-	-	-	-
24	27¼	29⅛	13⅞	1	3⅛	12	44	8	5¾	4⅛	25	4½	2¼	⅝	-	-	-	-	-
30	33¾	36⅛	17⅜	1⅛	4	15	54	10	6	4½	31	6	2¼	¾	-	-	-	-	-
36	39¾	42⅛	20½	1⅛	4	15	62	12	6¼	5⅜	37	6	2⅛	¾	-	-	-	-	-
42	45¾	48⅛	23⅝	1½	5	18	84	14	7	6	43	6	2½	¾	-	-	-	-	-
48	51¾	54⅜	26¾	1½	6	24 [1]	90	16	7⅜	6⅛	49⅛	6	2½	¾	-	-	-	-	-
54	58½	61½	30	2	6	30 [1]	100	18	7⅞	6½	55⅛	7	3	1	-	-	-	-	-
60	65	68	34	2	6	30 [1]	102	20	8⅛	7⅛	61⅛	8	3¼	1	-	-	-	-	-
72	77½	80¼	41	2	13	[5]	121	25½	10⅝	8¾	73¼	8	3⅜	1	-	-	-	-	-

GATE DIMENSIONS IN INCHES

1 WATERMAN C-10 CANAL GATE
NTS

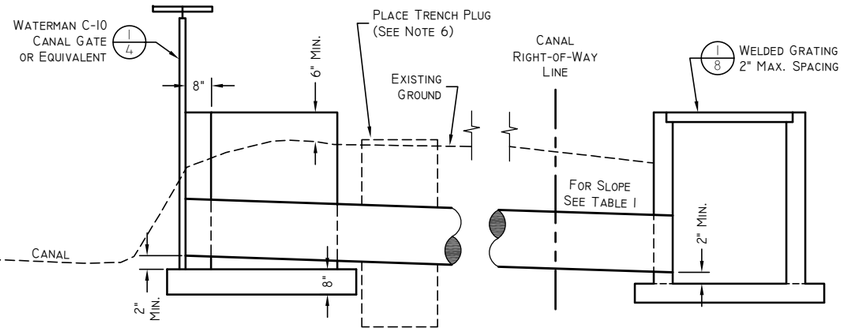

B WEIR SECTION
NTS

NOTES:

1. LID DETAILS FOR BOX SHOWN ON SHEET 1/8 OR 2/8.
2. BOX NOT TO BE PLACED IN DRIVEWAYS, ROADS, OR OTHER TRAFFIC AREAS.
3. ALL PIPES INTO BOXES SHALL BE GROUTED AND WATERTIGHT.
4. BOX WALL THICKNESS AND REINFORCEMENT ARE DEPENDENT ON SITE CONDITIONS AND DEPTH. MINIMUM SIZE AS SHOWN.
5. DIMENSIONS SHOWN ON WALLS AND BOXES ARE MINIMUM SIZE. SPECIFIC SITE CONDITIONS OF BOXES AND WALLS MAY REQUIRE ADDITIONAL THICKNESS OR WIDTH.
6. TRENCH PLUG TO BE PLACED IN LOCATION SHOWN FOR WIDTH OF TRENCH AND 12 INCHES ABOVE AND BELOW PIPE AT A THICKNESS OF 24 INCHES. PLUGS SHALL BE A 10% BENTONITE AND 90% CLAY MIXTURE.
7. PLACE STRUCTURE ON 6-INCHES OF IRRIGATION COMPANY ENGINEER APPROVED COMPACTED BEDDING.

TABLE I

MINIMUM PIPE SLOPES		
PIPE SIZE	MIN. SLOPE, FT/FT	MIN. SLOPE, %
24"	0.0008	.08%
30"	0.00058	.058%

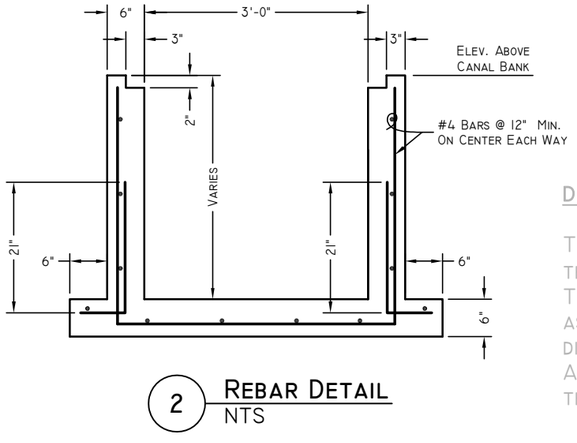

2 REBAR DETAIL
NTS

DISCLAIMER:

THE DRAWINGS PROVIDED IN THESE STANDARDS ARE ONLY INTENDED TO SHOW THE TYPE OF FACILITY(IES) THAT WILL BE ACCEPTABLE TO THE SFSIC. THESE ARE NOT INTENDED TO BE USED DIRECTLY IN THE DESIGN OF FACILITIES AS EACH ENCROACHMENT/CROSSING HAS ITS OWN UNIQUE CIRCUMSTANCE, DIMENSIONS, DESIGN CRITERIA, ETC. IT IS THE RESPONSIBILITY OF THE APPLICANT'S DESIGN ENGINEER, WHO WILL STAMP THE DRAWING, TO ENSURE THAT EACH CROSSING IS DESIGNED PROPERLY.

SEE WWW.WATERMANUSA.COM/PDF/C-10.PDF

SPANISH FORK SOUTH IRRIGATION COMPANY

DESIGNER: KYLE DEVANEY
DRAFTSMAN: MATT GUMM
CHECKED: KYLE DEVANEY
REVIEWED:
PROJECT LEADER: KYLE DEVANEY
PRINT DATE: NOVEMBER 2, 2023

NO.	DATE	REVISIONS DESCRIPTION
INITS.		

SPANISH FORK SOUTH IRRIGATION COMPANY

TYPICAL DRAWINGS
WEIR TURNOUT GATE

JOB NO. 21073

04- Weir Turnout Gate.dwg
C:\21073 SFSIC Review\Standard Drawings
LAYOUT: Details

SHEET 4 OF 15

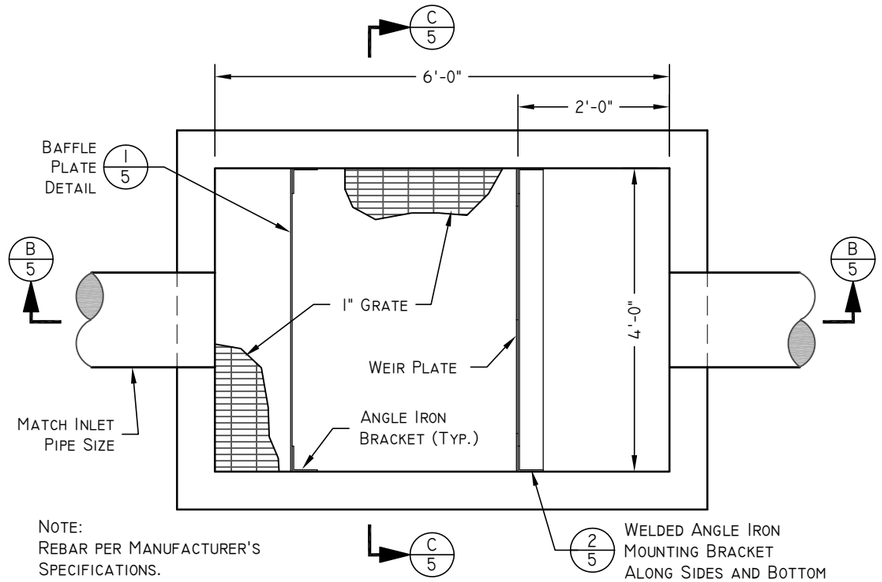

NOTE:
REBAR PER MANUFACTURER'S SPECIFICATIONS.

A **PLAN VIEW**
NTS

DISCLAIMER:

THE DRAWINGS PROVIDED IN THESE STANDARDS ARE ONLY INTENDED TO SHOW THE TYPE OF FACILITY(IES) THAT WILL BE ACCEPTABLE TO THE SFSIC. THESE ARE NOT INTENDED TO BE USED DIRECTLY IN THE DESIGN OF FACILITIES AS EACH ENCROACHMENT/CROSSING HAS ITS OWN UNIQUE CIRCUMSTANCE, DIMENSIONS, DESIGN CRITERIA, ETC. IT IS THE RESPONSIBILITY OF THE APPLICANT'S DESIGN ENGINEER, WHO WILL STAMP THE DRAWING, TO ENSURE THAT EACH CROSSING IS DESIGNED PROPERLY.

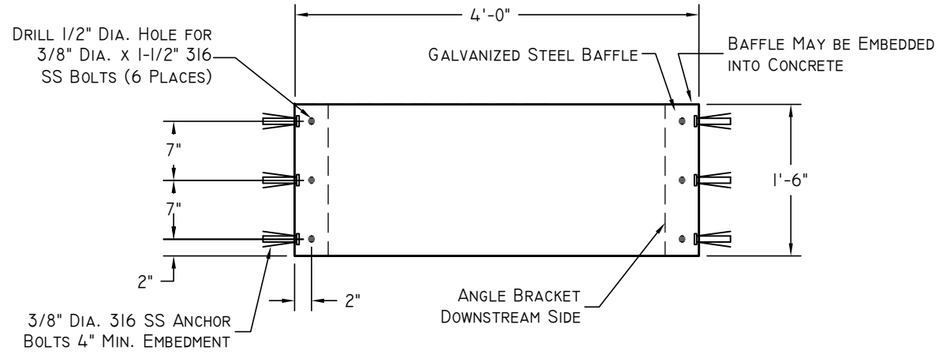

I **BAFFLE PLATE DETAIL**
NTS

TABLE 1
$Q=3.367\ LH^{3/2}$ @ L=3

H (FT.)	Q (CFS)
0.2	0.90
0.3	1.66
0.4	2.56
0.5	3.57
0.6	4.69
0.66	5.42

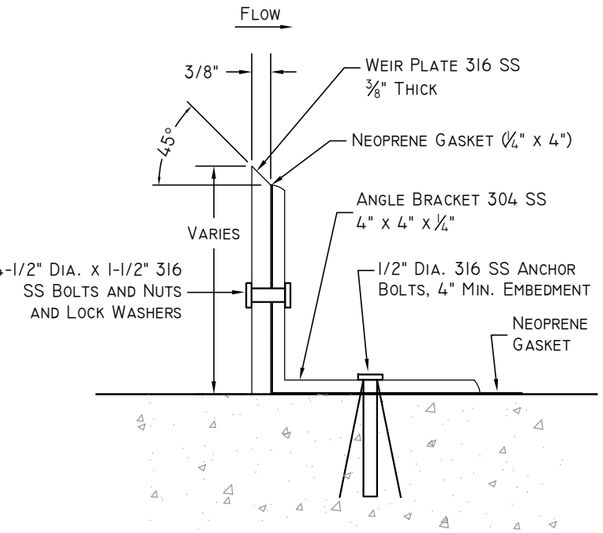

2 **ANGLE IRON DETAIL**
NTS

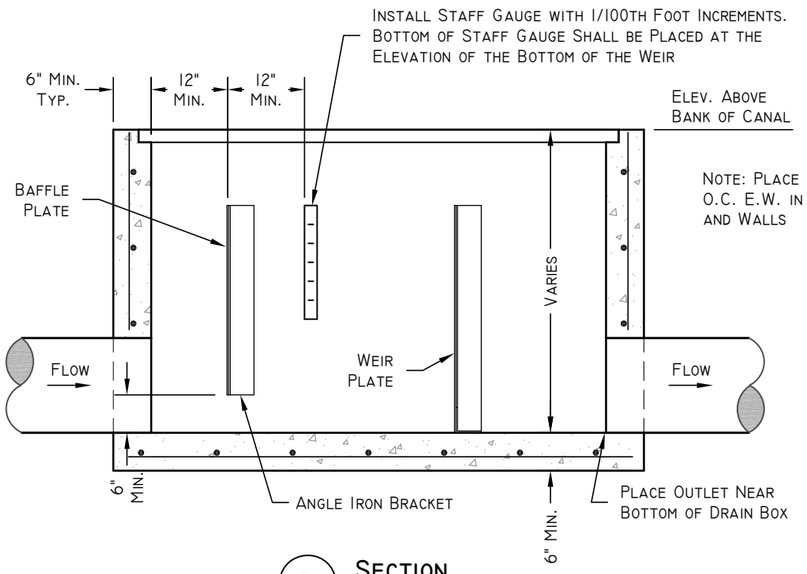

B **SECTION**
NTS

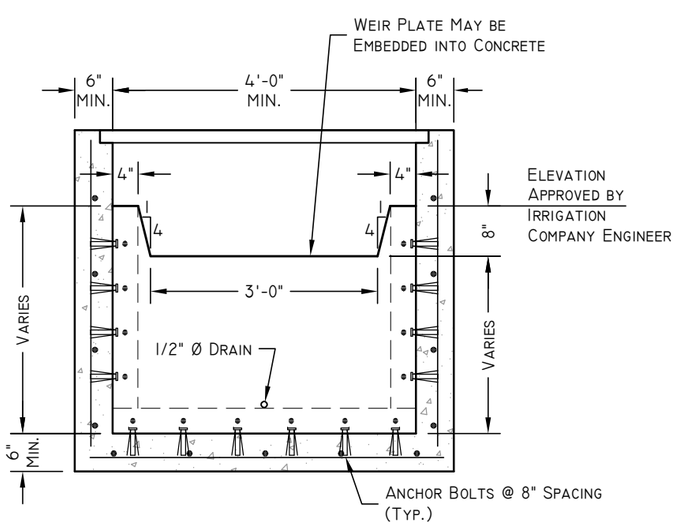

C **SECTION**
NTS

NOTES:

1. IF BOX IS CAST IN PLACE REBAR TO BE PLACED AT 12" O.C. E.W. MINIMUM.
2. DETAILS FOR CAST IN PLACE BOX SEE 2/4.
3. ALL PIPES INTO BOX SHALL BE GROUTED AND WATERTIGHT.
4. SUBMIT TO IRRIGATION COMPANY ENGINEER FOR APPROVAL ON FINAL DIMENSIONS ON REBAR REINFORCEMENT AND CONCRETE COMPONENTS.
5. PLACE STRUCTURE ON 6-INCHES OF IRRIGATION COMPANY ENGINEER APPROVED COMPACTED BEDDING.

SPANISH FORK SOUTH IRRIGATION COMPANY

DESIGNER: KYLE DEVANEY
DRAFTSMAN: MATT GUPR
CHECKED: KYLE DEVANEY
REVIEWED:
PROJECT LEADER:
PRINT DATE: NOVEMBER 2, 2023

NO.	DATE	REVISIONS DESCRIPTION

TYPICAL DRAWINGS
3 FOOT CIPOLETTI WEIR

JOB NO. 21073
05- 3 Foot Cipoletti Weir.dwg
O:\21073 SFSIC Review\Standard Drawings
LAYOUT: Details (11x17)

SHEET 5 OF 15

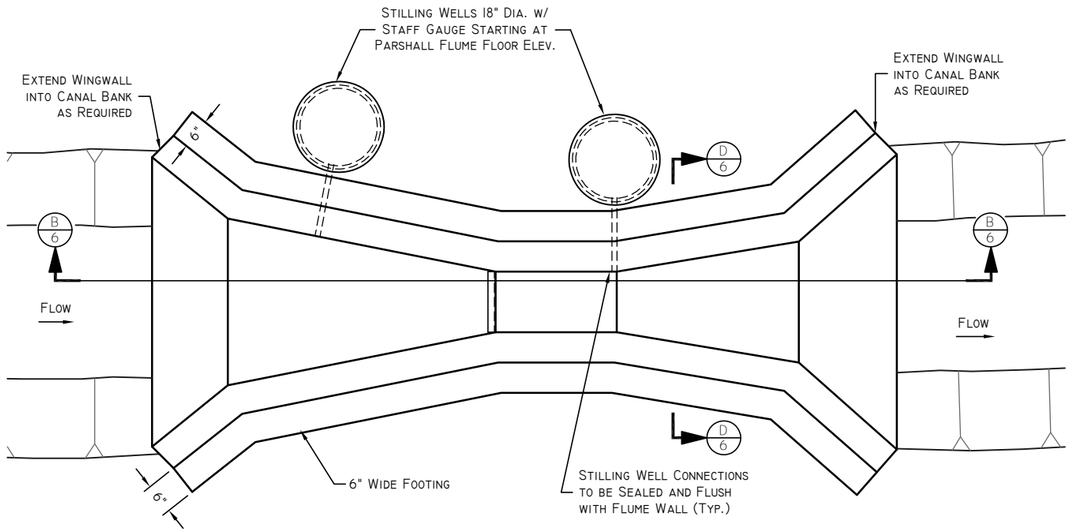

A Plan

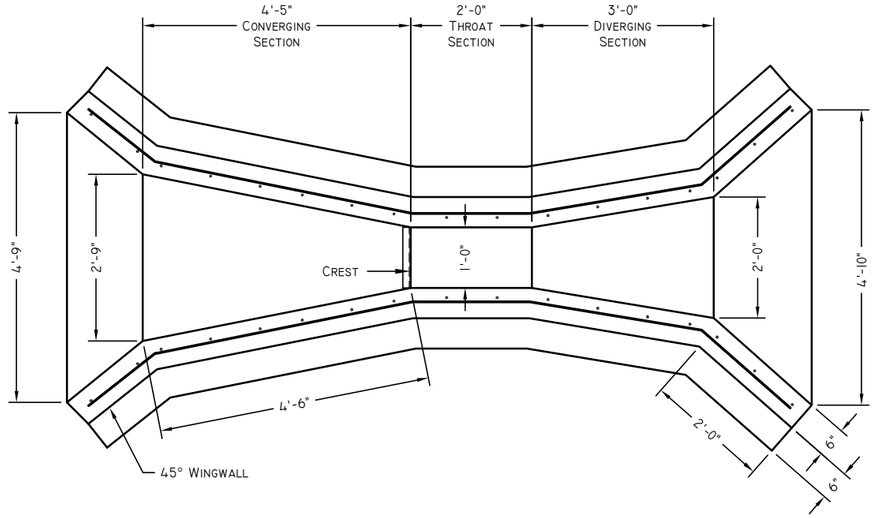

C Rebar Plan

Disclaimer:

The Drawings provided in these Standards are only intended to show the type of Facility(ies) that will be acceptable to the SFSIC. These are not intended to be used directly in the design of facilities as each encroachment/crossing has its own unique circumstance, dimensions, design criteria, etc. It is the responsibility of the Applicant's Design Engineer, who will stamp the drawing, to ensure that each crossing is designed properly.

Notes:

1. Reinforcing to be #4 Rebar @ 12-inches O.C. E.W. with 20-inch Minimum Splice Length.
2. Rebar to be Bent at Angles of Structures. Overlap to be in Straight Lengths Only.
3. Applicant to Submit Actual Plans and Material of Flume Prior to Construction.

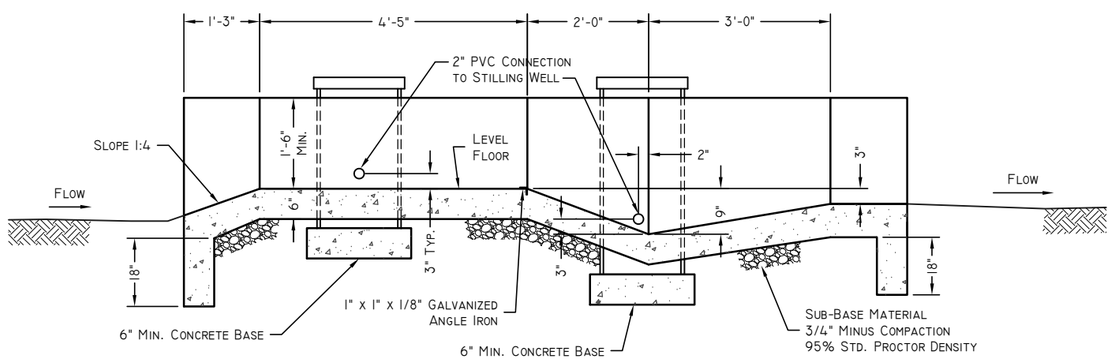

B Profile

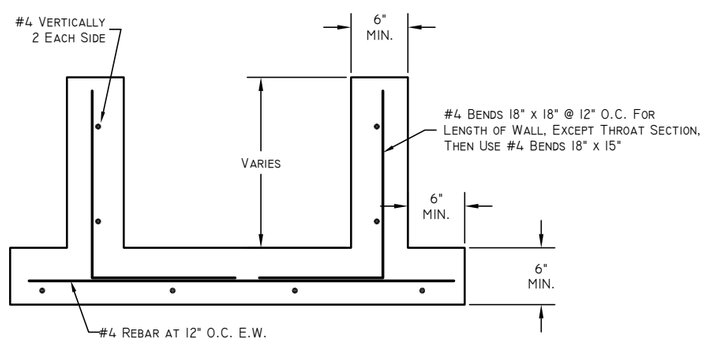

D Cross Section
NTS

Table I
Head-Flow Relationship for Concrete Flume

Head H_a (feet)	Flow Q (cfs)	Head H_a (feet)	Flow Q (cfs)
0.20	0.35	0.86	3.18
0.21	0.37	0.87	3.24
0.22	0.40	0.88	3.29
0.23	0.43	0.89	3.35
0.24	0.46	0.90	3.41
0.25	0.49	0.91	3.46
0.26	0.51	0.92	3.52
0.27	0.54	0.93	3.58
0.28	0.58	0.94	3.64
0.29	0.61	0.95	3.70
0.30	0.64	0.96	3.76
0.31	0.68	0.97	3.82
0.32	0.71	0.98	3.88
0.33	0.74	0.99	3.94
0.34	0.77	1.00	4.00
0.35	0.80	1.01	4.06
0.36	0.84	1.02	4.12
0.37	0.88	1.03	4.18
0.38	0.92	1.04	4.25
0.39	0.95	1.05	4.31
0.40	0.99	1.06	4.37
0.41	1.03	1.07	4.43
0.42	1.07	1.08	4.50
0.43	1.11	1.09	4.56
0.44	1.15	1.10	4.62
0.45	1.19	1.11	4.68
0.46	1.23	1.12	4.75
0.47	1.27	1.13	4.82
0.48	1.31	1.14	4.88
0.49	1.35	1.15	4.94
0.50	1.39	1.16	5.01
0.51	1.44	1.17	5.08
0.52	1.48	1.18	5.15
0.53	1.52	1.19	5.21
0.54	1.57	1.20	5.28
0.55	1.62	1.21	5.34
0.56	1.66	1.22	5.41
0.57	1.70	1.23	5.48
0.58	1.75	1.24	5.55
0.59	1.80	1.25	5.62
0.60	1.84	1.26	5.69
0.61	1.88	1.27	5.76
0.62	1.93	1.28	5.82
0.63	1.98	1.29	5.89
0.64	2.03	1.30	5.96
0.65	2.08	1.31	6.03
0.66	2.13	1.32	6.10
0.67	2.18	1.33	6.18
0.68	2.23	1.34	6.25
0.69	2.28	1.35	6.32
0.70	2.33	1.36	6.39
0.71	2.38	1.37	6.46
0.72	2.43	1.38	6.53
0.73	2.48	1.39	6.60
0.74	2.53	1.40	6.68
0.75	2.58	1.41	6.75
0.76	2.63	1.42	6.82
0.77	2.68	1.43	6.89
0.78	2.74	1.44	6.97
0.79	2.80	1.45	7.04
0.80	2.85	1.46	7.12
0.81	2.90	1.47	7.19
0.82	2.96	1.48	7.26
0.83	3.02	1.49	7.34
0.80	3.07	1.50	7.41
0.85	3.12		

Spanish Fork South Irrigation Company

DESIGNER: Kyle Devaney
DRAFTSMAN: Matt Gunn
CHECKED: Kyle Devaney
REVIEWED:
PROJECT LEADER: Kyle Devaney
PRINT DATE: November 2, 2023

NO.	DATE	REVISIONS	INITS.

DESCRIPTION

Spanish Fork South Irrigation Company

Typical Drawings
1-Foot Parshall Flume

JOB NO. 21073

06-1 foot Parshall Flume.dwg
O:\21073 SFSIC Reviews\Standard Drawings

LAYOUT: 11 x 17

SHEET 6 OF 15

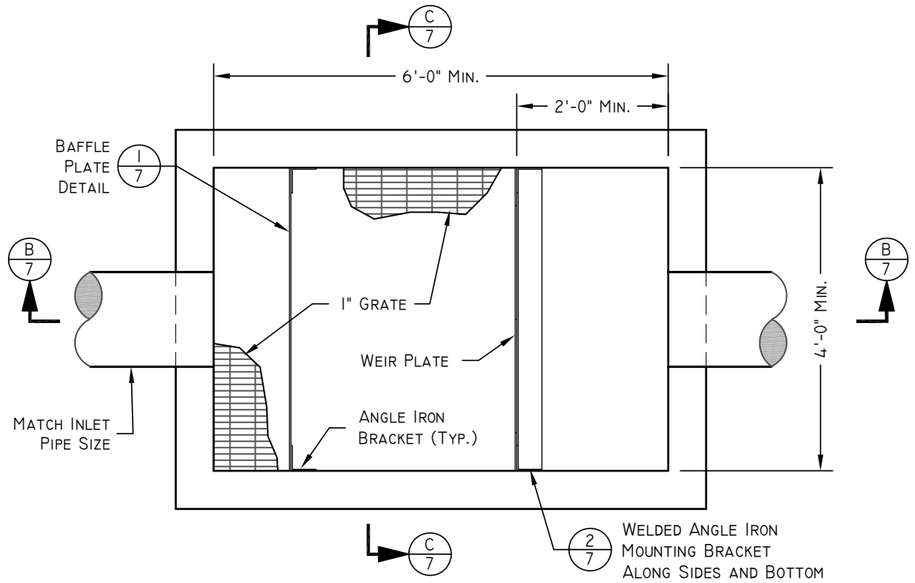

A **PLAN VIEW**
NTS

FLOW TABLE
Q=CW x H^2.5

CW	2.5
H (FT.)	Q (CFS)
0.20	0.04
0.30	0.12
0.40	0.25
0.50	0.44
0.60	0.70
0.70	1.02
0.80	1.43
0.90	1.92
1.00	2.50
1.10	3.17
1.20	3.94
1.30	4.82
1.40	5.80
1.50	6.89

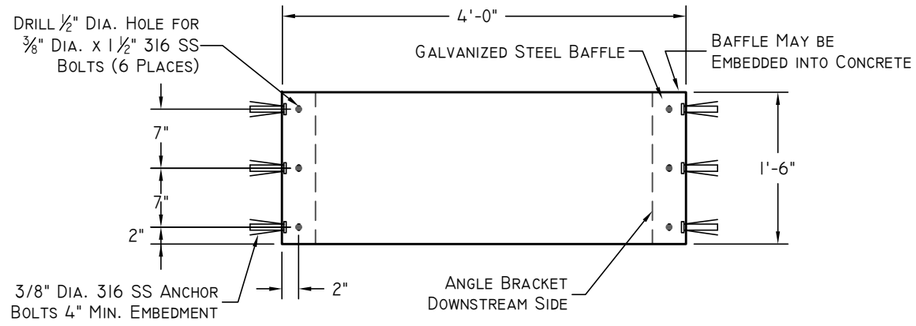

I **BAFFLE PLATE DETAIL**
NTS

NOTES:

1. IF BOX IS CAST IN PLACE, PUT #4 REBAR PLACED AT 12" O.C. E.W. IN STRUCTURE FLOOR AND WALLS MINIMUM.
2. DETAILS FOR CAST IN PLACE BOX SEE 2/4.
3. ALL PIPES INTO BOX SHALL BE GROUTED AND WATERTIGHT.
4. SUBMIT TO IRRIGATION COMPANY ENGINEER FOR FINAL DIMENSIONS ON REBAR REINFORCEMENT AND CONCRETE COMPONENTS.
5. PLACE STRUCTURE ON 6-INCHES OF IRRIGATION COMPANY ENGINEER APPROVED COMPACTED BEDDING

DISCLAIMER:

THE DRAWINGS PROVIDED IN THESE STANDARDS ARE ONLY INTENDED TO SHOW THE TYPE OF FACILITY(IES) THAT WILL BE ACCEPTABLE TO THE SFSIC. THESE ARE NOT INTENDED TO BE USED DIRECTLY IN THE DESIGN OF FACILITIES AS EACH ENCROACHMENT/CROSSING HAS ITS OWN UNIQUE CIRCUMSTANCE, DIMENSIONS, DESIGN CRITERIA, ETC. IT IS THE RESPONSIBILITY OF THE APPLICANT'S DESIGN ENGINEER, WHO WILL STAMP THE DRAWING, TO ENSURE THAT EACH CROSSING IS DESIGNED PROPERLY.

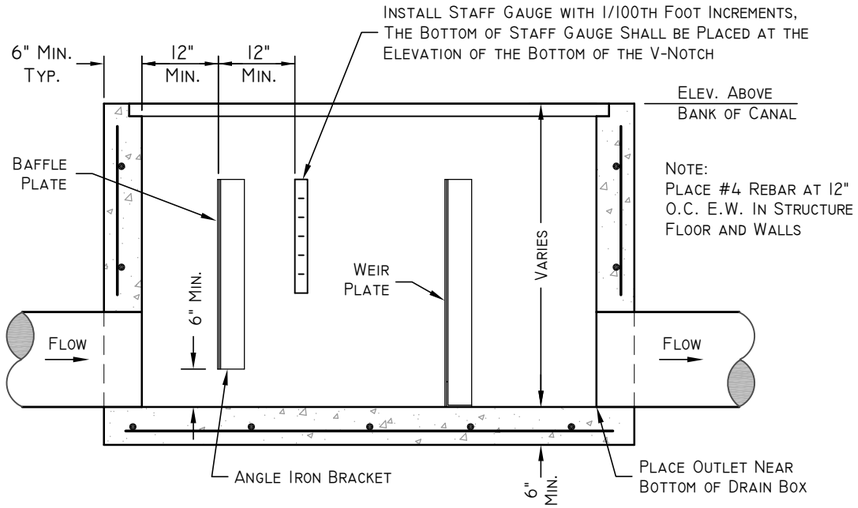

B **SECTION**
NTS

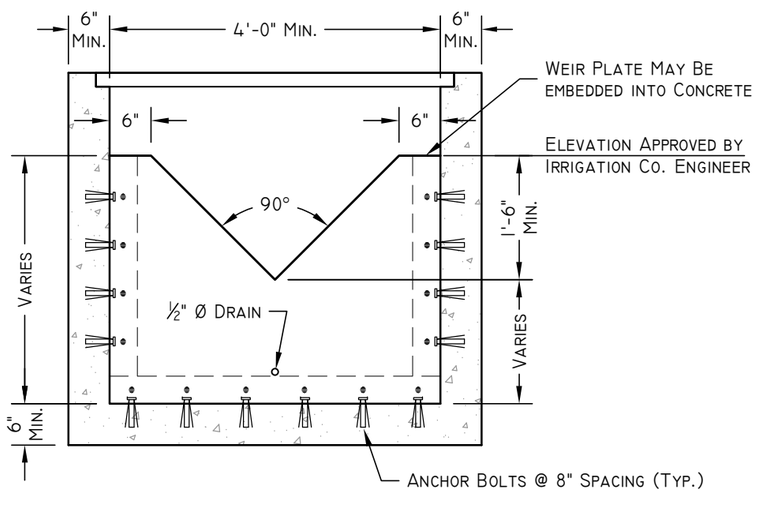

C **SECTION**
NTS

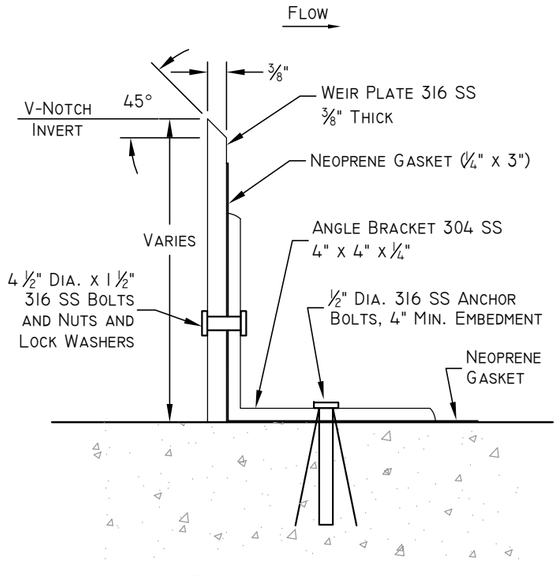

2 **ANGLE IRON DETAIL**
NTS

SPANISH FORK SOUTH IRRIGATION COMPANY

SPANISH FORK SOUTH IRRIGATION COMPANY

TYPICAL DRAWINGS
90D V-NOTCH WEIR

DESIGNED:	KYLE DEVANEY	PROJECT LEADER:	KYLE DEVANEY
DRAFTSMAN:	MATT GUPR	PRINT DATE:	NOVEMBER 2, 2023
CHECKED:	KYLE DEVANEY	CHECKED	
REVIEWED:	MATT GUPR	REVIEWED	

NO.	DATE	INITS.	REVISIONS DESCRIPTION

JOB NO. 21073

07_90° V-Notch Weir.dwg
O:\21073 SFSIC Reviews\Standard Drawings
LAYOUT: Details (11x17)

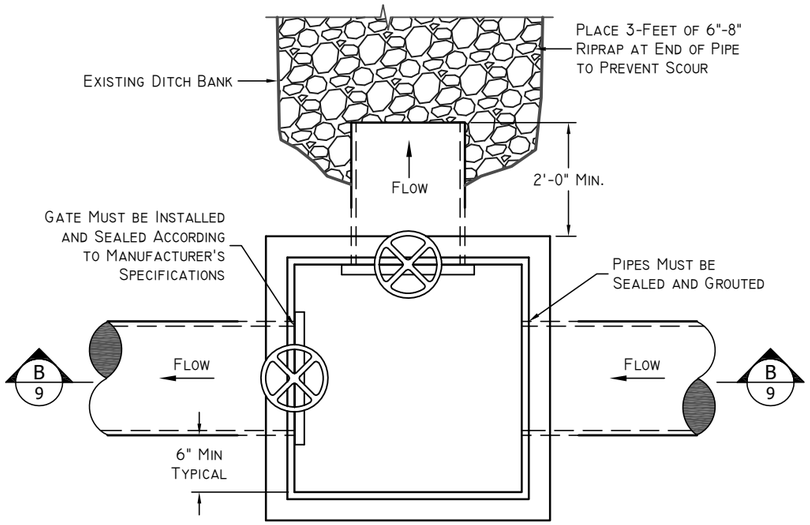

A **Turnout Box Plan**
NTS

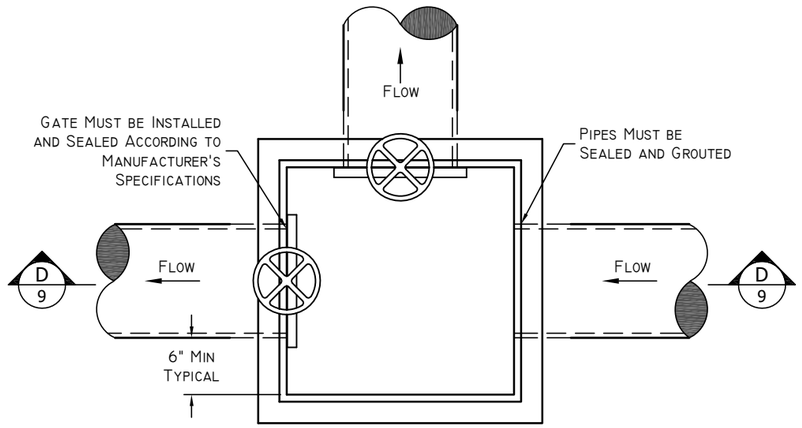

C **Diversion Box**
NTS

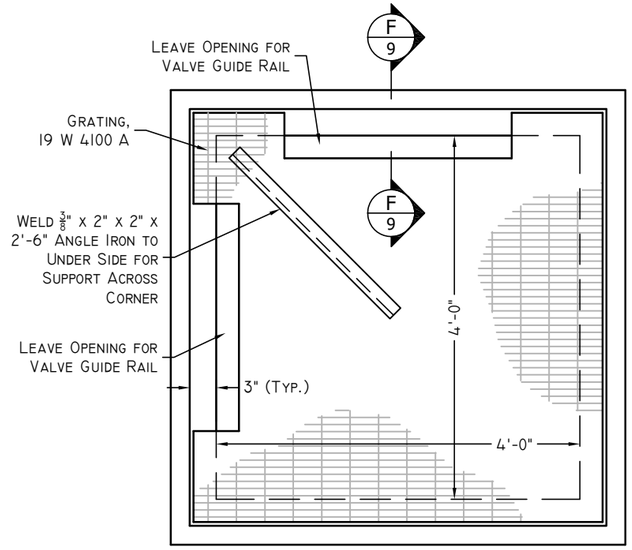

E **Grate Detail - Top View**
NTS

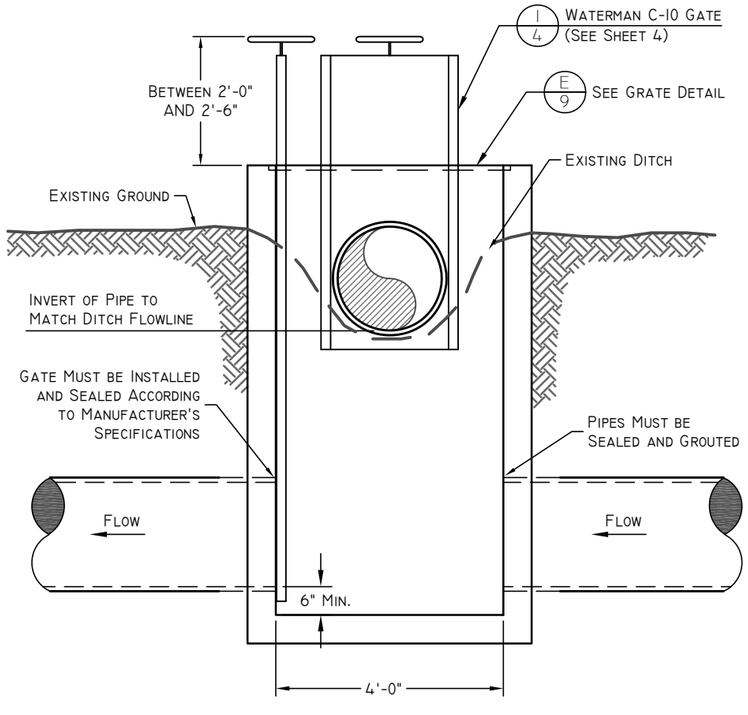

B **Turnout Box Section**
NTS

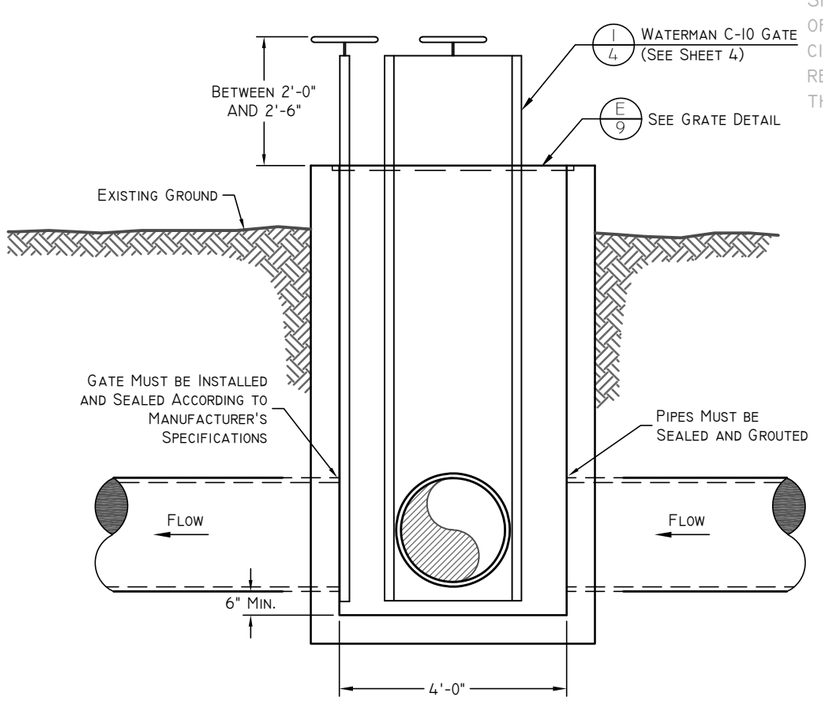

D **Diversion Box Section**
NTS

Disclaimer:

The Drawings provided in these Standards are only intended to show the type of Facility(ies) that will be acceptable to the SFSIC. These are not intended to be used directly in the design of facilities as each encroachment/crossing has its own unique circumstance, dimensions, design criteria, etc. It is the responsibility of the Applicant's Design Engineer, who will stamp the drawing, to ensure that each crossing is designed properly.

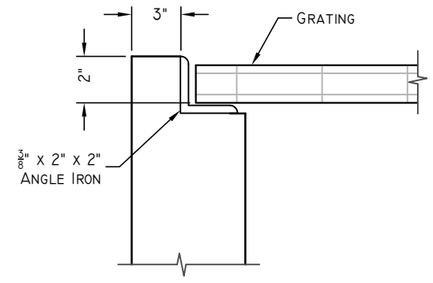

F **Wall Section**
NTS

Notes:

1. All Pipes Into Box Shall Be Grouted and Watertight.
2. Boxes May Be Precast or Cast In Place. Boxes Shall Have a Minimum Interior Width and Length of 4 Feet With #4 Rebar @ 12 Inches O.C. Boxes Must Be Submitted For Review.
3. Turnout and Diversion Boxes Shall Not Be Placed In Roadway.
4. All Exposed Metal Shall be Galvanized.

Spanish Fork South Irrigation Company

Irrigation Turnout-Diversion Box

Typical Drawings

Designer:	Kyle Devaney
Draftsman:	Matt Gunn
Checked:	Kyle Devaney
Reviewed:	
Project Leader:	Kyle Devaney
Print Date:	November 2, 2023

Revisions

No.	Date	Description

Job No. 21073

09- Irrigation Turnout Diversion Box.dwg
O:\21073 SFSIC Review\Standard Drawings

LAYOUT: Details

Spanish Fork South Irrigation Company

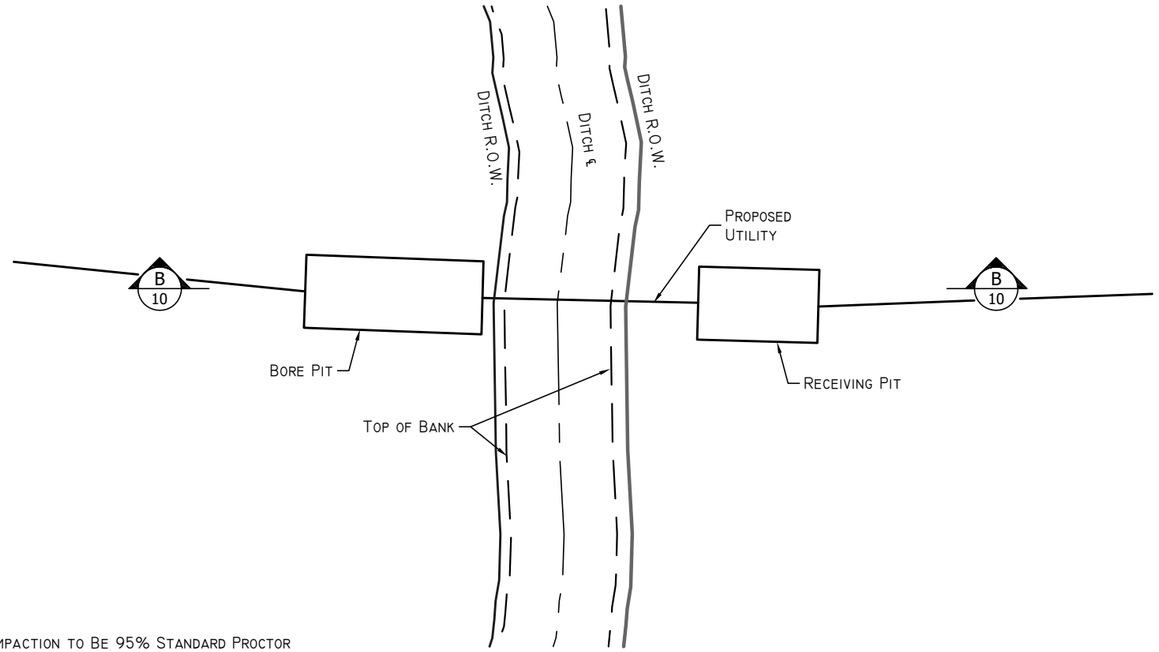

A DIRECTIONAL DRILL UNDER DITCH
NTS

NOTES:

1. BORE PIT COMPACTION TO BE 95% STANDARD PROCTOR DENSITY.
2. FILL BORE PITS WITH A MIXTURE OF NATIVE MATERIAL AND 10% BENTONITE POWDER TO CREATE A SEAL THAT WILL PREVENT WATER FROM FOLLOWING THE NEW CONDUIT.
3. CONDUIT MUST BE A MINIMUM OF 2 FEET BELOW THE BOTTOM OF THE EXISTING DITCH OR PIPE.
4. BORE PITS MUST BE COMPLETELY PLACED OUTSIDE OF THE DITCH RIGHT-OF-WAY.

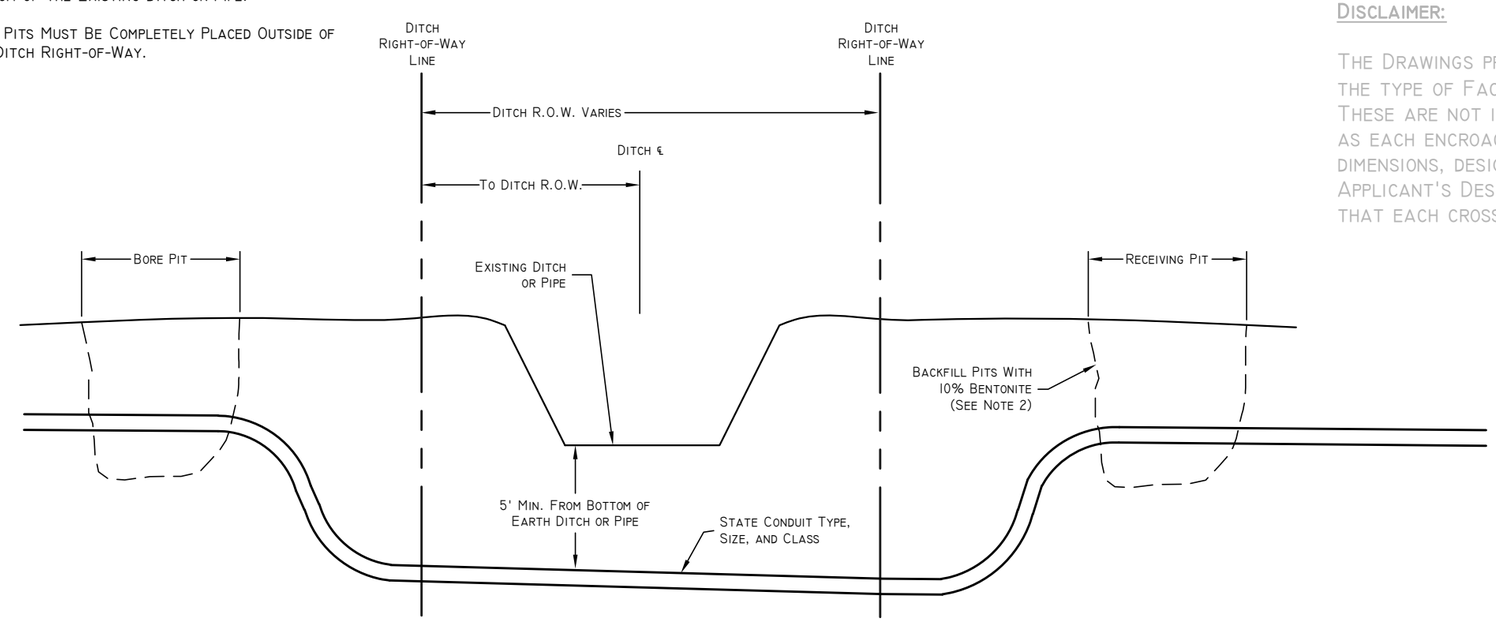

B DIRECTIONAL DRILL CROSS SECTION
NTS

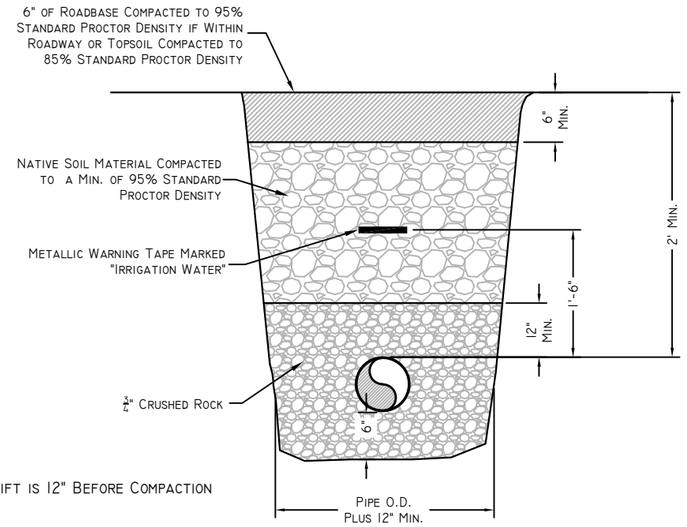

NOTES:

1. MAXIMUM LIFT IS 12" BEFORE COMPACTION

C PIPE BEDDING TRENCH SECTION
NTS

DISCLAIMER:

THE DRAWINGS PROVIDED IN THESE STANDARDS ARE ONLY INTENDED TO SHOW THE TYPE OF FACILITY(IES) THAT WILL BE ACCEPTABLE TO THE SFSIC. THESE ARE NOT INTENDED TO BE USED DIRECTLY IN THE DESIGN OF FACILITIES AS EACH ENCROACHMENT/CROSSING HAS ITS OWN UNIQUE CIRCUMSTANCE, DIMENSIONS, DESIGN CRITERIA, ETC. IT IS THE RESPONSIBILITY OF THE APPLICANT'S DESIGN ENGINEER, WHO WILL STAMP THE DRAWING, TO ENSURE THAT EACH CROSSING IS DESIGNED PROPERLY.

SPANISH FORK SOUTH IRRIGATION COMPANY

DESIGNER: KYLE DEVANEY
DRAFTSMAN: MATT GUMM
CHECKED: KYLE DEVANEY
REVIEWED: MATT GUMM
PROJECT LEADER: KYLE DEVANEY
PRINT DATE: NOVEMBER 2, 2023

NO.	DATE	INITS.	DESCRIPTION
			REVISIONS

SPANISH FORK SOUTH IRRIGATION COMPANY

TYPICAL DRAWINGS

DIRECTIONAL DRILLING - PIPE BEDDING

JOB NO. 21073

11- Directional Drilling.dwg
O:\21073 SFSIC Review\Standard Drawings

LAYOUT: Details

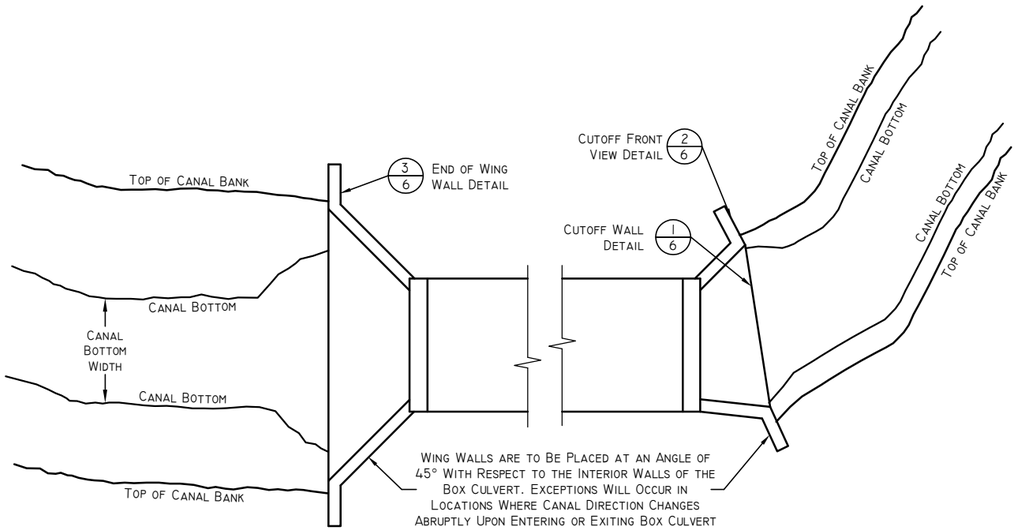

A **Plan View of Box Culvert**
NTS

Notes:

1. Box Culvert to Have a Minimum of 4 Feet from the Invert to the Obvert, and a Minimum of 2 feet from the High Water Mark to the Obvert. Please Specify the High Water MArk Elevation.
2. Width of Box Culvert Shall be a Minimum of 6 Feet.
3. Access to Canal Operation and Maintenance Road Shall be Installed with Curb Cuts at Drive Approaches and Thickened Concrete at Sidewalks.
4. Cutoff Walls and Aprons Between Wing Walls are Required.
5. End of Wing Wall Shall Not Interfere with Operation and Maintenance Road.
6. 6 Foot Chain Link Fence or 2 Foot Parapet Wall is Required on All Box Culverts that Carry Pedestrian Traffic. Exceptions may Occur Where Local Ordinances Note Otherwise and Upon Approval by Canal Company.
7. Drawings Submitted for Review are to Show Plan and Profile Views, Note Slope, Include Detail Indicating Rebar Size and Spacing, and State Traffic Loading.
8. Casings Must Have a Minimum of 2 Feet Between Top of Casing and Bottom of Box Culvert.
9. All Concrete Used in Construction Shall Have a Minimum Compressive Strength of 4,000 psi. The Concrete Mix Shall Include Between 5% and 7% air Entrainment.
10. the Top of the Wingwall on the Outer End Shall be at an Elevation at or Above the Level of the Ground.

Disclaimer:

The Drawings Provided in These Standards are Only Intended to Show the Type of Facility(ies) That Will be Acceptable to the SFSIC. These Are Not Intended to be Used Directly in the Design of Facilities as Each Encroachment/Crossing Has its Own Unique Circumstance, Dimensions, Design Criteria, etc. It is the Responsibility of the Applicant's Design Engineer, Who Will Stamp the Drawing, to Ensure that Each Crossing is Designed Properly.

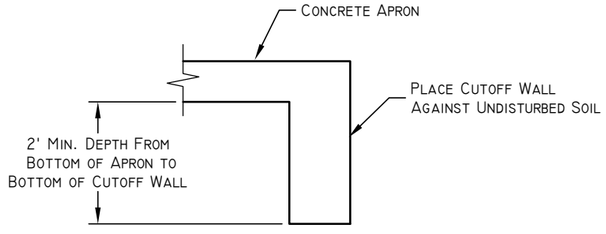

1 **Cutoff Wall Detail**
NTS

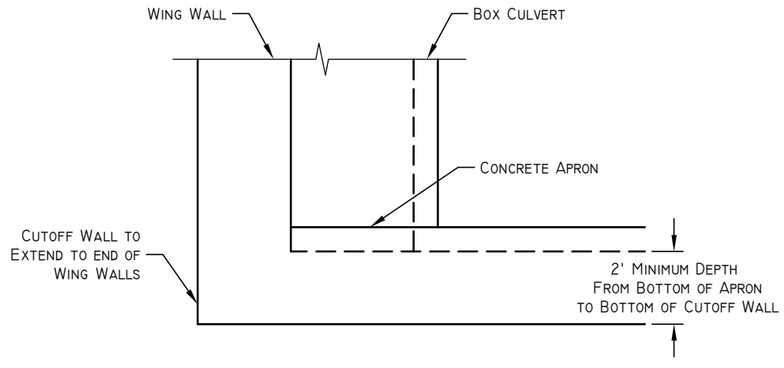

2 **Cutoff Front View Detail**
NTS

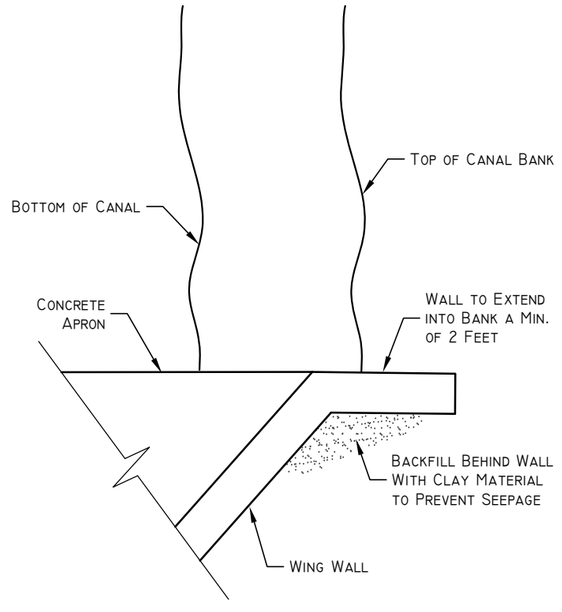

3 **End of Wing Wall Detail**
NTS

Spanish Fork South Irrigation Company

DESIGNED:	KYLE DEVANEY
DRAFTSMAN:	MATT GUMM
CHECKED:	KYLE DEVANEY
REVIEWED:	CHECKED
	REVIEWED
PROJECT LEADER:	KYLE DEVANEY
PRINT DATE:	NOVEMBER 2, 2023

NO.	DATE	INITS.	REVISIONS DESCRIPTION

SPANISH FORK SOUTH IRRIGATION COMPANY

TYPICAL DRAWINGS
BOX CULVERT DETAILS

JOB NO. 21073

12- Box Culvert Details.dwg
OX21073 SFSIC Reviews\Standard Drawings
LAYOUT: Details

SHEET
10 OF 15

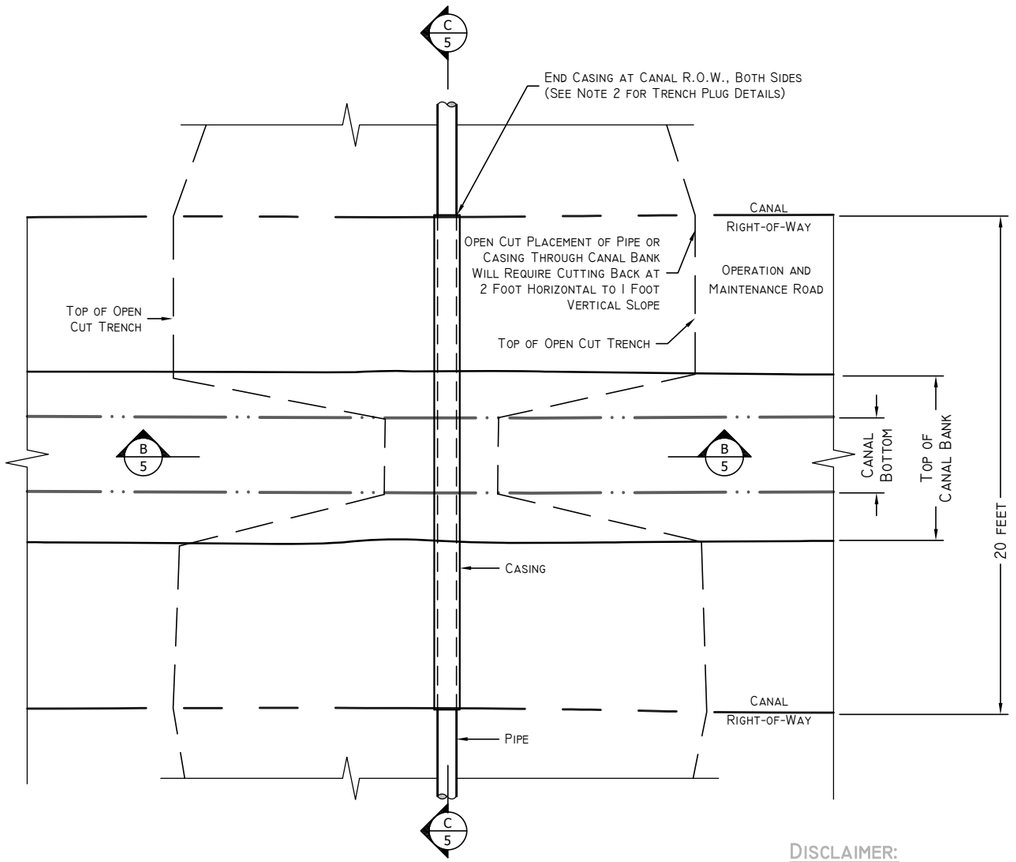

A Open Cut Plan View
NTS

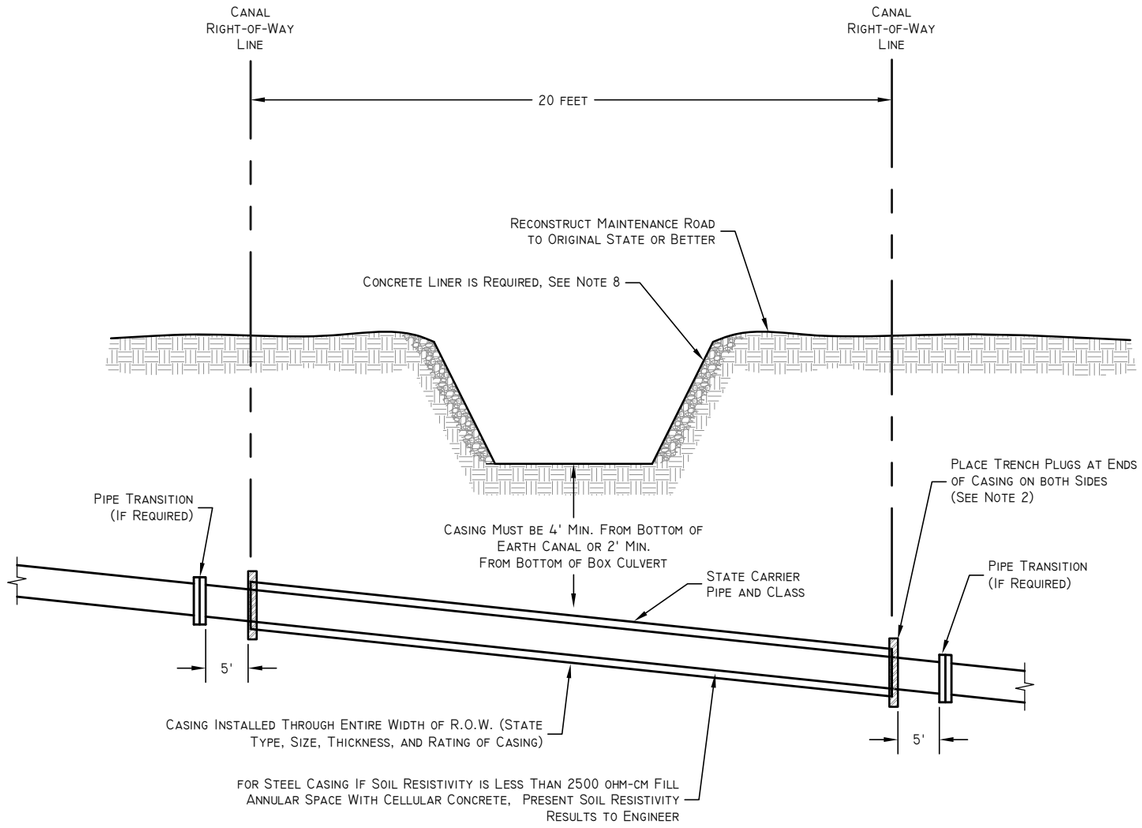

C Open Cut Canal Crossing Profile
NTS

Notes:

1. Removal and Replacement of Canal Floor and Banks Will Require Testing and Proctors By a Licensed Soils Lab. Compaction to Be 92% Modified Proctor Density.
2. Trench Plugs are to Be Placed in Locations Shown on Both Sides For Width of Trench and 12 Inches Above and Below Casing Pipes and a Minimum Thickness of 24 Inches. Plugs Shall Be a 10% Bentonite and 90% Clay Mixture, or Shall be A Flowable Fill Concrete.
3. Storm Water Runoff Enters the Canal During Storm Events or at Other Unexpected Times. It is the Responsibility of the Contractor to Protect the Work Site.
4. Waterline Pipe Inside of Casing Shall Have Restraining Joints.
5. Thrust Blocks are Required on All Bends and Tees For DIP, PVC, or PIP Waterlines.
6. Casing Must be 4' Min. From Bottom of Earth Canal or 2' Min. From Bottom of Box Culvert.
7. Canal Right-of-Way is Generally 20 Feet Wide Centered Over the Canal.
8. Concrete Liner is to be Installed in the Canal Extending 5 Feet Past the Extents of Canal Disturbance see Detail. (A 12)
9. Carrier Pipe Shall Have Adequate Casing Spacers.

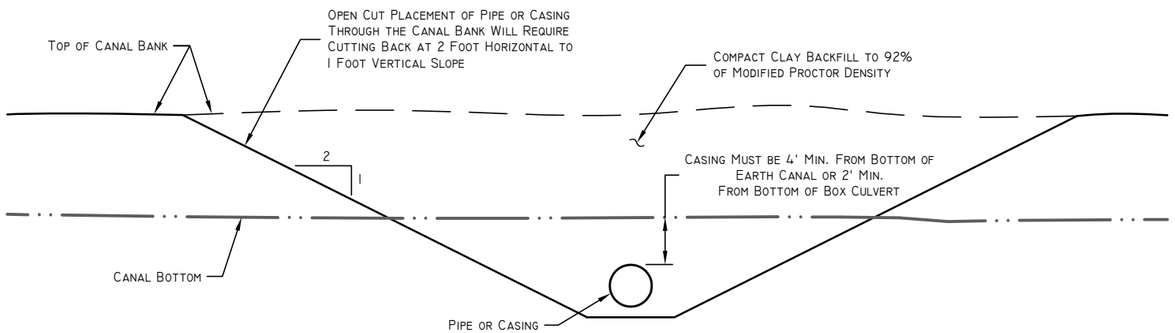

B Open Cut Canal Crossing Cross Section
NTS

Table 1
Steel Casing Thickness

Diameter (Inches)	Minimum Wall Thickness (Inches)
12"	0.188"
14" - 16"	0.312"
18"	0.312"
20" - 22"	0.375"
24" - 26"	0.438"
28" - 32"	0.500"
34" - 36"	0.562"
38" - 42"	0.562"

Disclaimer:

The Drawings Provided in These Standards are Only Intended to Show the Type of Facility(ies) That Will be Acceptable to the SFSIC. These Are Not Intended to be Used Directly in the Design of Facilities as Each Encroachment/Crossing Has its Own Unique Circumstance, Dimensions, Design Criteria, etc. It is the Responsibility of the Applicant's Design Engineer, Who Will Stamp the Drawing, to Ensure that Each Crossing is Designed Properly.

Spanish Fork South Irrigation Company

DESIGNER: Kyle Devaney
DRAFTSMAN: Matt Gunn
CHECKED: Checked
REVIEWED: Reviewed
PROJECT LEADER: Kyle Devaney
PRINT DATE: November 2, 2023

NO.	DATE	INITS.	DESCRIPTION

Spanish Fork South Irrigation Company
Typical Drawings
Open Cut Details

Open Cut Details.dwg
O:\21073 SFSIC Review\Standard Drawings
LAYOUT: Details

JOB NO. 21073

SHEET 11 OF 15

DISCLAIMER:

THE DRAWINGS PROVIDED IN THESE STANDARDS ARE ONLY INTENDED TO SHOW THE TYPE OF FACILITY(IES) THAT WILL BE ACCEPTABLE TO THE SFSIC. THESE ARE NOT INTENDED TO BE USED DIRECTLY IN THE DESIGN OF FACILITIES AS EACH ENCROACHMENT/CROSSING HAS ITS OWN UNIQUE CIRCUMSTANCE, DIMENSIONS, DESIGN CRITERIA, ETC. IT IS THE RESPONSIBILITY OF THE APPLICANT'S DESIGN ENGINEER, WHO WILL STAMP THE DRAWING, TO ENSURE THAT EACH CROSSING IS DESIGNED PROPERLY.

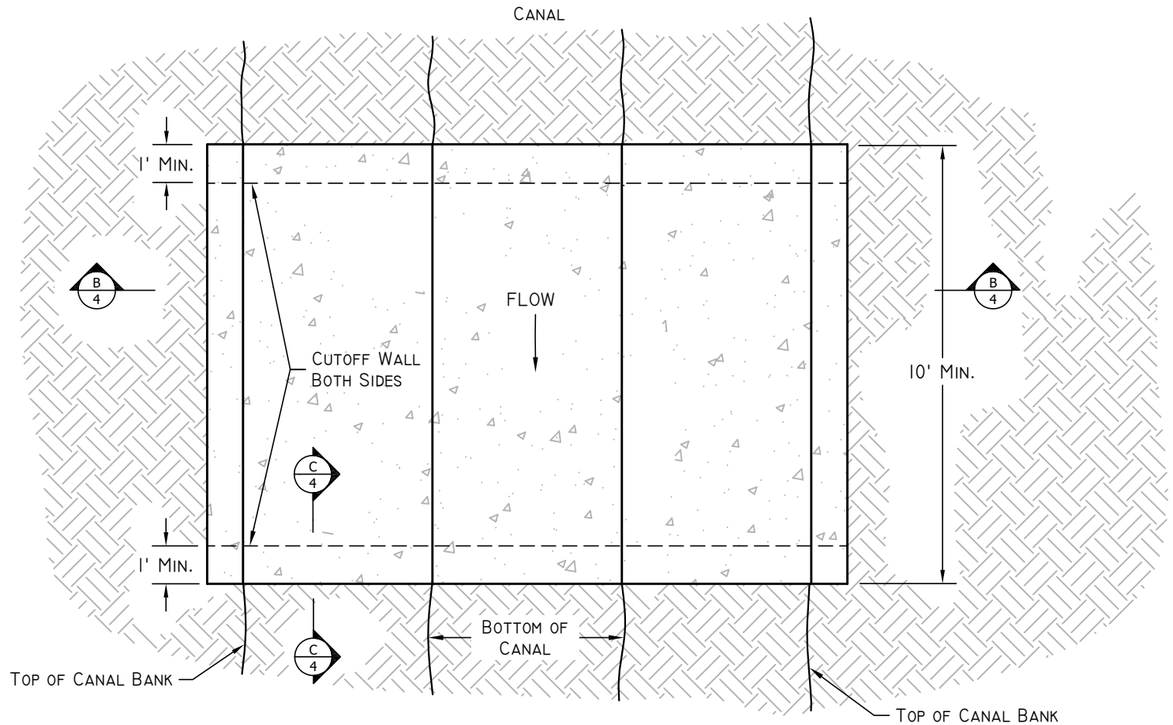

A CONCRETE LINER PLAN
NTS

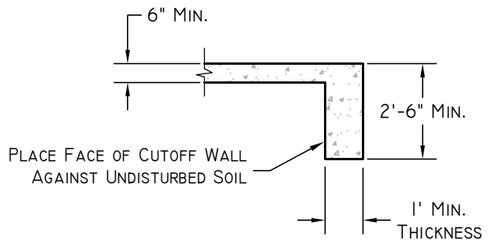

NOTE:
ENGINEER TO DETERMINE REBAR SIZE AND SPACING IN CUTOFF WALL.

C CUTOFF WALL CROSS SECTION
NTS

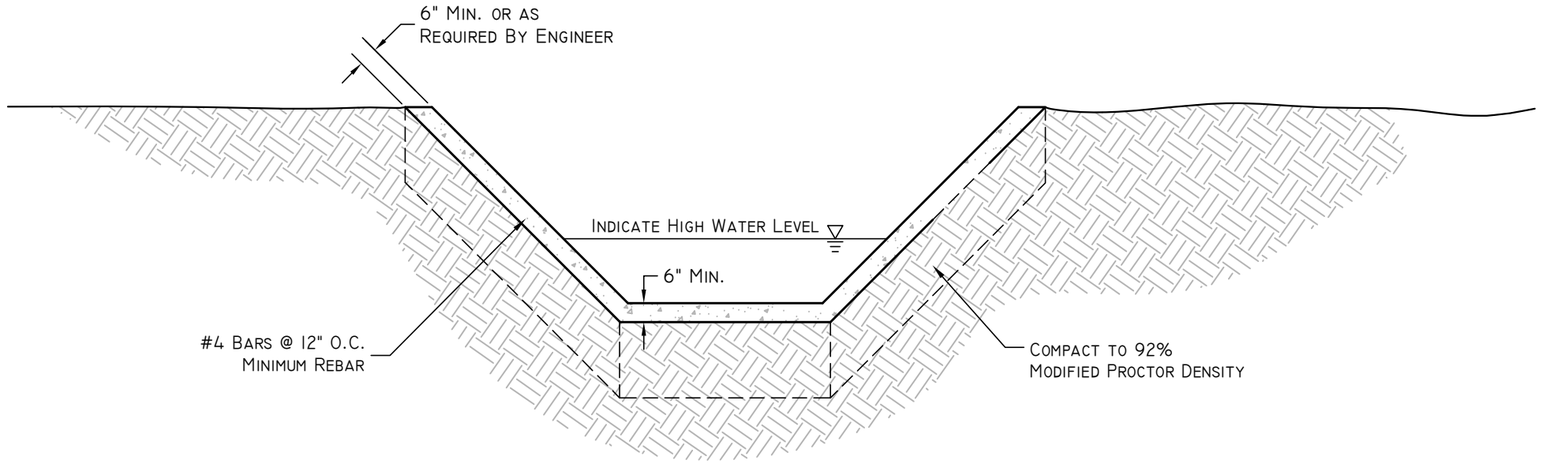

B CONCRETE LINER CROSS SECTION
NTS

SPANISH FORK SOUTH IRRIGATION COMPANY

DESIGNER: KYLE DEVANEY
DRAFTSMAN: MATT GURR
CHECKED: CHECKED
REVIEWED: REVIEWED
PROJECT LEADER: KYLE DEVANEY
PRINT DATE: NOVEMBER 2, 2023

REVISIONS

NO.	DATE	INITS.	DESCRIPTION

SPANISH FORK SOUTH IRRIGATION COMPANY
TYPICAL DRAWINGS
CONCRETE LINER

Concrete Liner.dwg
O:\21073 SFSIC Reviews\Standard Drawings
LAYOUT: Details

JOB NO. 21073

SHEET 12 OF 15

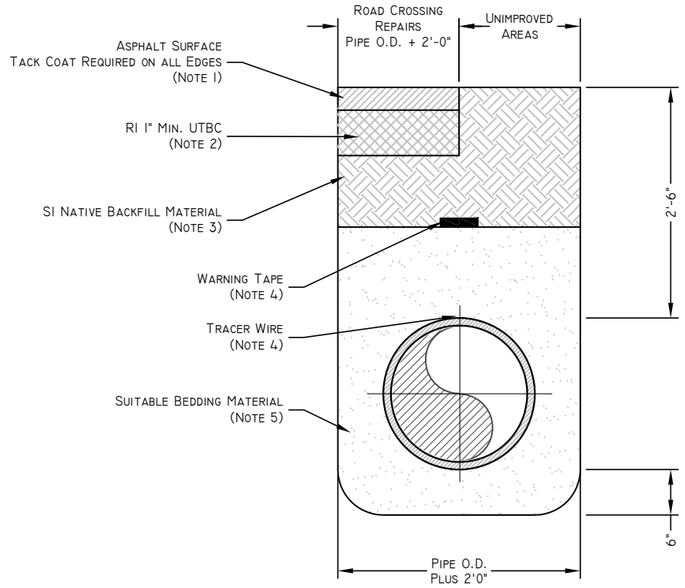

A **Large Diameter Trench Detail**
Not To Scale

Notes:

1. ½" Mix Bituminous Surface According to the Specifications From the Authority Having Jurisdiction. Saw Cut All Edges. Minimum Thickness as Follows:
   A) 2 ½" Minimum Thickness on Private Driveways.
   B) 3" Minimum Thickness on Residential Roads.
   C) 4" Minimum Thickness on All City Arterial Roads or County Roadways.
2. RI Minimum of 1" Untreated Base Course Compacted to 95% Max. Dry Density.
3. SI Native Backfill Borrow Material Compacted to 95% Max. Dry Density.
4. Plastic Tape to be Installed 12" Above Top of Pipe. Install Locator Wire Above Pipe.
5. Suitable Material as Defined in Specification Section 31-05-13 to be Used for Pipe Installations From 6" Beneath to 12" Above the Pipe. Install Pipe on Stable Foundation With Uniform Bearing Under the Pipe Barrel, Excavate in Bedding for All Pipe Joints. When Allowed by Engineer, Native Material May be Used as Fill, Provided That Unsuitable Material as Defined in the Specifications is Removed.
6. For Specifications on Backfill Material and Trenching, Refer to Section 31-05-13 and Section 31-23-16.23, Respectively.
7. For Trenches within UDOT Right-of-Way construction Must be Performed per UDOT Specifications, specifically 03575 - Embankment Borrow and Backfill; and 02618 - Drainage Pipe Liner
8. All Pipes in Public ROW must be RCP.
9. Minimum Cover over RCP is 2 Feet.

Disclaimer:

The Drawings Provided in These Standards are Only Intended to Show the Type of Facility(ies) That Will be Acceptable to the SFSIC. These Are Not Intended to be Used Directly in the Design of Facilities as Each Encroachment/Crossing Has its Own Unique Circumstance, Dimensions, Design Criteria, etc. It is the Responsibility of the Applicant's Design Engineer, Who Will Stamp the Drawing, to Ensure that Each Crossing is Designed Properly.

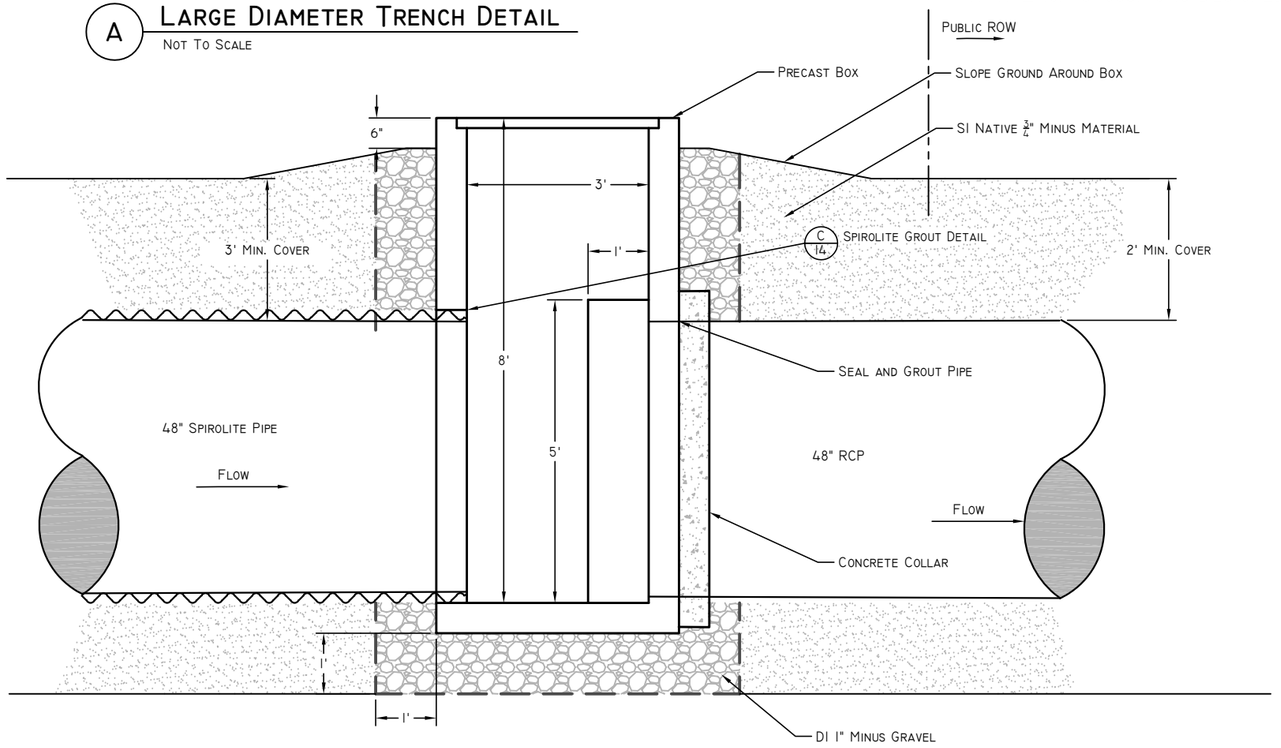

B **Spirolite to RCP Transition**
Not To Scale

Spanish Fork South Irrigation Company

DESIGNED:	KYLE DEVANEY
DRAFTSMAN:	MATT GUNN
CHECKED:	KYLE DEVANEY
REVIEWED:	CHECKED
	REVIEWED
PROJECT LEADER:	KYLE DEVANEY
PRINT DATE:	NOVEMBER 2, 2023

NO.	DATE	INITS.	REVISIONS DESCRIPTION

Spanish Fork South Irrigation Company

Typical Drawings

Large Diameter Pipe Details

JOB NO. 21073

large Diameter Trench Details.dwg
O:\21073 SFSIC Reviews\Standard Drawings
LAYOUT: Trench

SHEET 13 OF 15

Notes:

1. All Steel Gates, Angles, Bolts and Nuts shall be Galvanized.
2. Structure Shall be Precast With no Knockout Boxes Allowed.
3. Seal all Pipe into Box With Non-Shrink Grout. See Spirolite Grout Detail (C/14)
4. Turnout Pipe to Connect to Existing Pipe or Ditch as Indicated in Turnout Table.

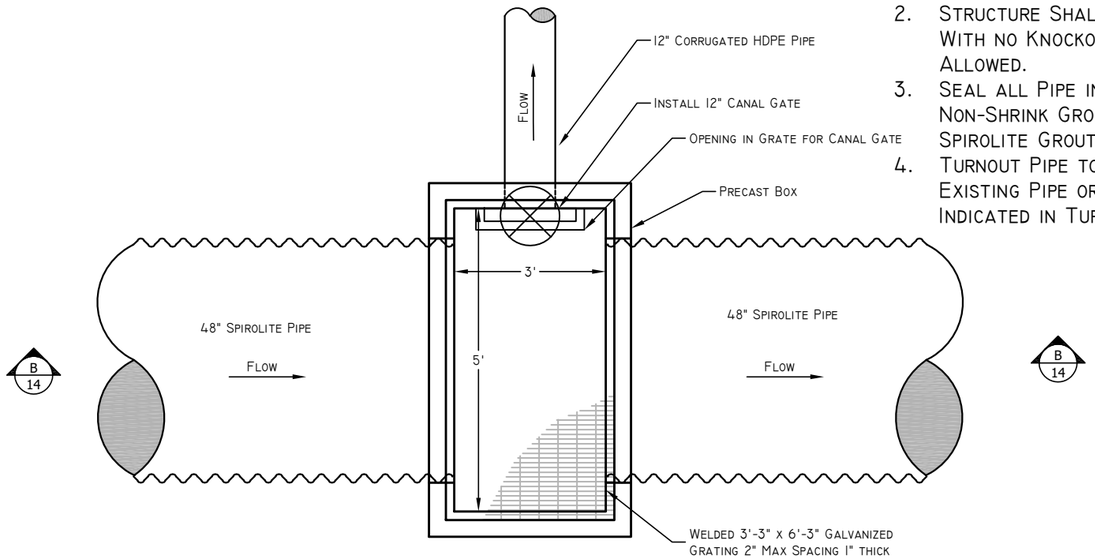

A Turnout Plan

Not To Scale

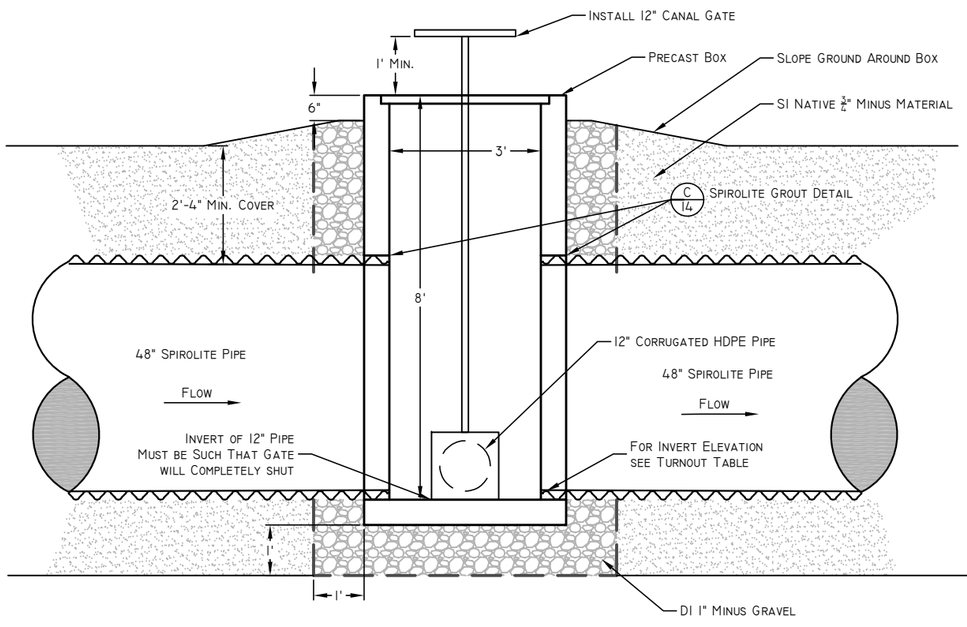

B Turnout Profile

Not To Scale

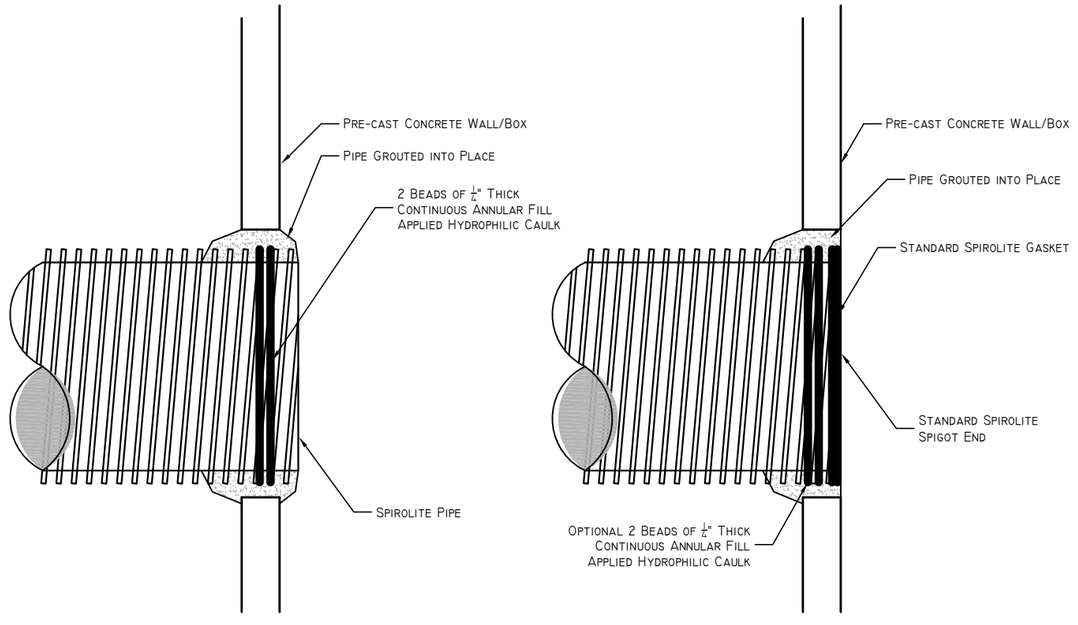

C Spirolite Grout Detail

Not To Scale

Disclaimer:

The Drawings Provided in These Standards are Only Intended to Show the Type of Facility(ies) That Will be Acceptable to the SFSIC. These Are Not Intended to be Used Directly in the Design of Facilities as Each Encroachment/Crossing Has its Own Unique Circumstance, Dimensions, Design Criteria, etc. It is the Responsibility of the Applicant's Design Engineer, Who Will Stamp the Drawing, to Ensure that Each Crossing is Designed Properly.

Spanish Fork South Irrigation Company

DESIGNED: KYLE DEVANEY
DRAFTSMAN: MATT GUHR
CHECKED: KYLE DEVANEY
REVIEWED: CHECKED
PROJECT LEADER: REVIEWED
PRINT DATE: KYLE DEVANEY, NOVEMBER 2, 2023

NO.	DATE	REVISIONS DESCRIPTION
		INITS.

Spanish Fork South Irrigation Company

Typical Drawings Turnout Details

JOB NO. 21073

large Diameter Trench Details.dwg
OX21073 SFSIC Reviews\Standard Drawings
LAYOUT: Turnout

SHEET 14 OF 15

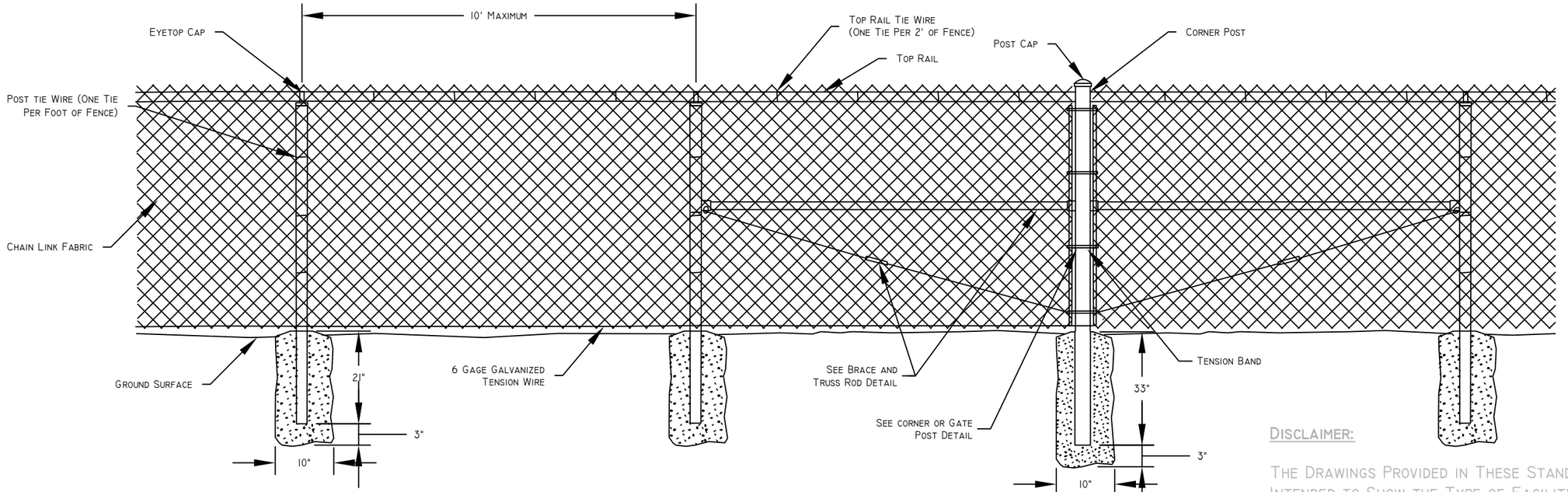

A **Standard Chain Link Fence (Typ.)**
Not To Scale

B **Corner Post (Typ.)**
Not To Scale

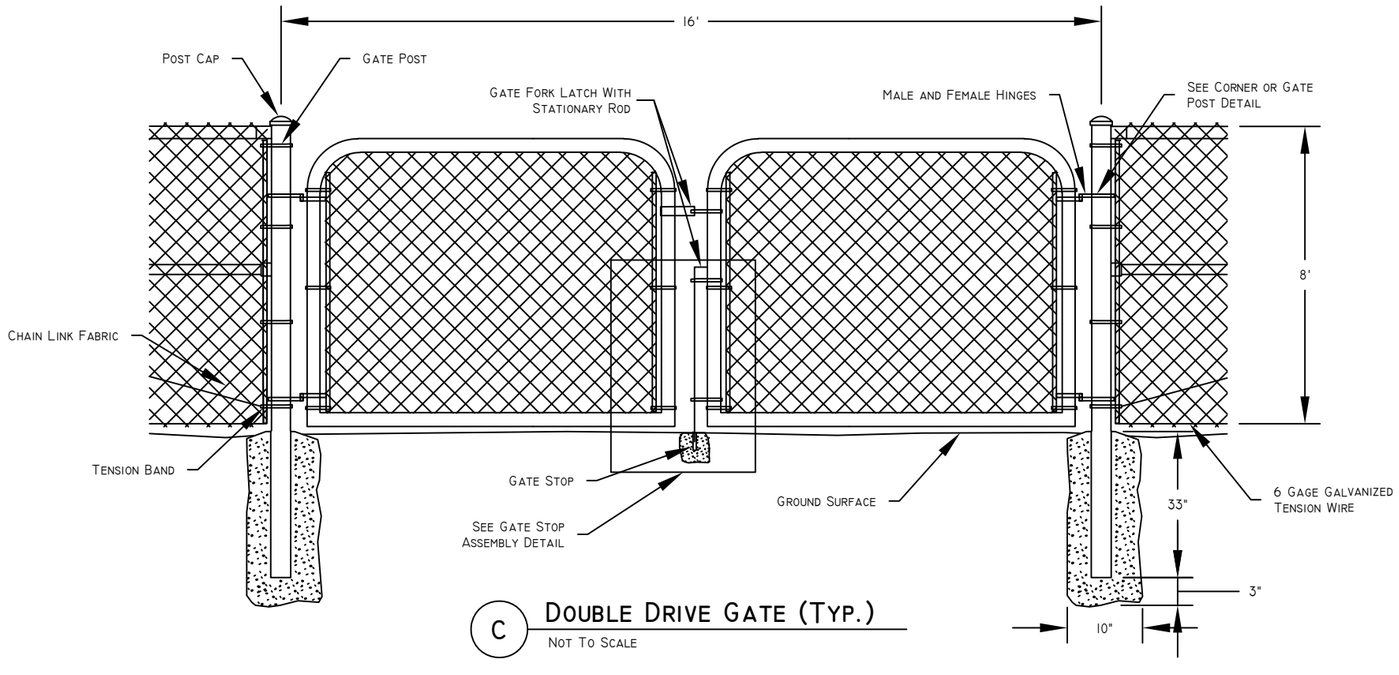

C **Double Drive Gate (Typ.)**
Not To Scale

Disclaimer:

The Drawings Provided in These Standards are Only Intended to Show the Type of Facility(ies) That Will be Acceptable to the SFSIC. These Are Not Intended to be Used Directly in the Design of Facilities as Each Encroachment/Crossing Has its Own Unique Circumstance, Dimensions, Design Criteria, etc. It is the Responsibility of the Applicant's Design Engineer, Who Will Stamp the Drawing, to Ensure that Each Crossing is Designed Properly.

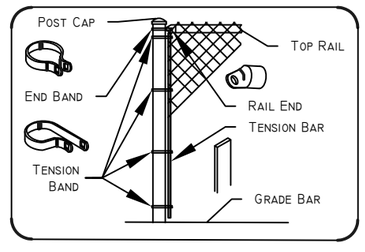

Corner or Gate Post Detail

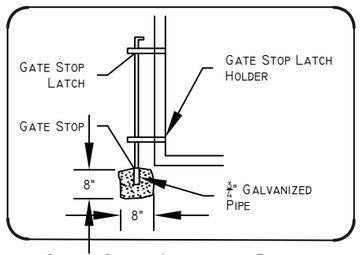

Gate Stop Assembly Detail

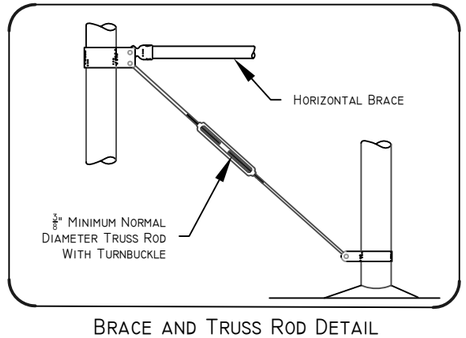

Brace and Truss Rod Detail

Spanish Fork South Irrigation Company

DESIGNER: | DRAFTSMAN: Kyle DeVaney | Matt Gurr
CHECKED: | REVIEWED: Checked | Reviewed
PROJECT LEADER: Kyle DeVaney
PRINT DATE: November 2, 2023

NO.	DATE	INITS.	DESCRIPTION

REVISIONS

Spanish Fork South Irrigation Company

Typical Drawings
Fence Details

JOB NO. 21073

large Diameter Trench Details.dwg
OV\21073 SFSIC Reviews\Standard Drawings

LAYOUT: Fence

SHEET 15 OF 15